**Ersatzteilliste**
**Spare parts list**
**Liste des pièces de rechange**

**Lista parti di ricambio**
**Lista de repuestos**
**Onderdelenlijst**

**6720612264**
(05.12) Sa

# ZBS16/170S-2solarMA ZBS16/83S-2MA ZBS16/83S-2MRA ZBS22/120S-2MA ZBS22/120S-2MRA ZBS30/150S-2MA

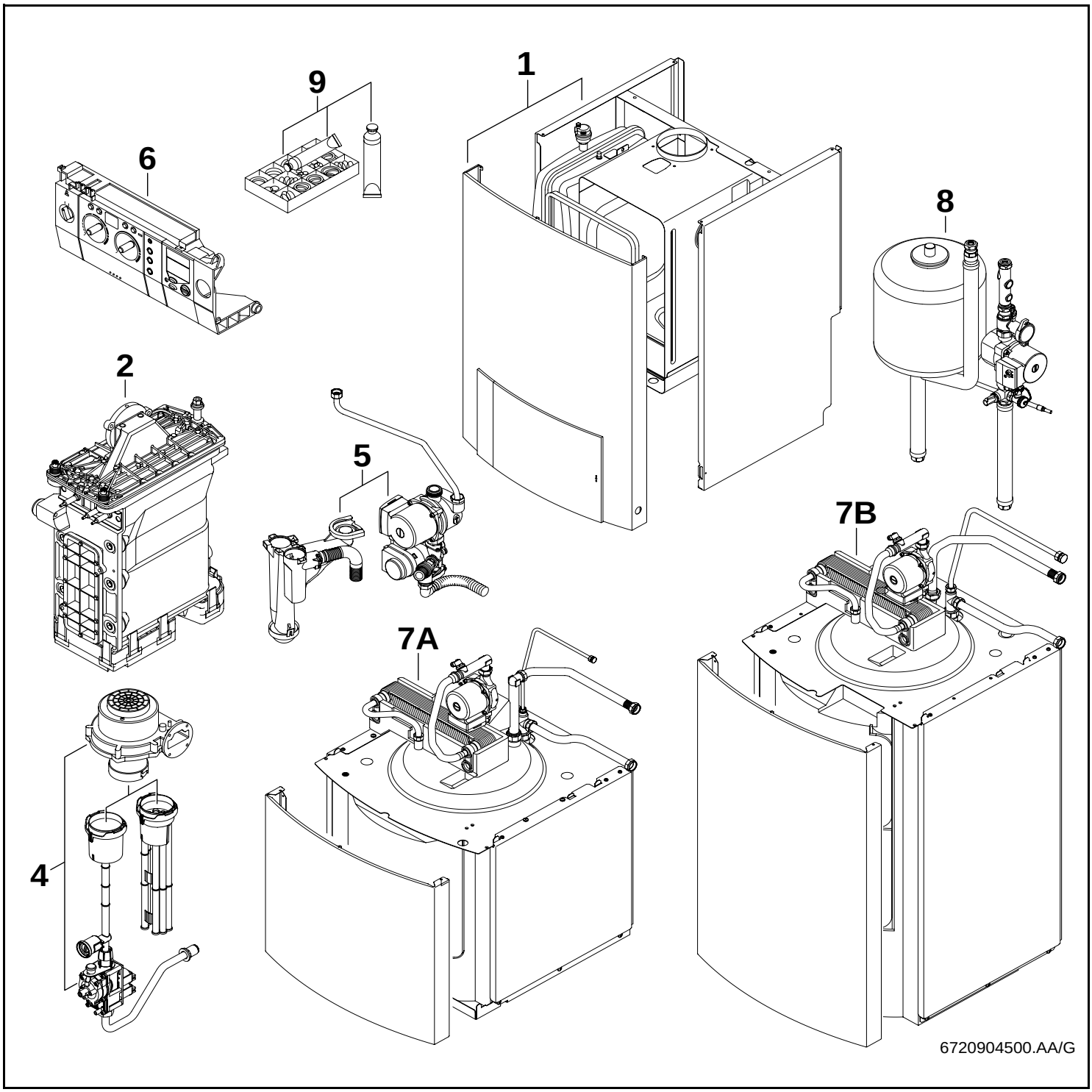


BOSCH

JUNKERS

Deutsch

## Wichtige Hinweise

- **Achtung seit 1. April 2003:**
  Umstellung von 10-stellige auf 11-stellige Ersatzteilbestellnummern.
  Beispiel: alt: 8710103043
  neu: 87101030430
  Bei Bestellungen immer eine “0” als 11. Stelle ergänzen. Alle Ersatzteillisten mit 10-stelligen Bestellnummern behalten ihre Gültigkeit!
- Ersatzteile dürfen nur von einem zugelassenen Installateur eingebaut werden!
- Die genannten Preisgruppen können sich während der Gültigkeit dieser Ersatzteilliste ändern. Wir empfehlen Ihnen daher, die Preisgruppen anhand der jeweils gültigen Preisliste zu prüfen.
- Im Anhang finden Sie:
  – die Übersetzungen aller verwendeten Teilebezeichnungen
  – eine Übersicht der Gerätetypen und Länder, für die diese Ersatzteilliste gilt.

English

## Important notes

- **Important change as of 1 April 2003:**
  Change-over from 10-digit to 11-digit spare parts order numbers.
  Example: Old number: 8710103043
  New number: 87101030430
  When placing orders always add an extra “0” on the end. All spare parts lists with 10-digit order numbers remain valid!
- The spare parts may only be installed by an approved installer!
- The price groups quoted may change during the period of validity of this spare parts list. We therefore advise you to check the price groups against the current price list.
- In the appendix you will find:
  – a list of translations of the names of all parts used
  – a list of the models and countries to which this spare parts list applies.

Français

## Indications importantes

- **Attention a partir du 1er avril:**
  Passage des numéros de commande à 10 chiffres à des numéros de commande à 11 chiffres pour les pièces de rechange.
  Exemple : ancien numéro: 8710103043
  nouveau numéro: 87101030430
  Rajouter toujours un “0” en 11ème position dans vos commandes. Toutes les listes de pièces de rechange affichant les numéros de commande à 10 chiffres restent valables.
- L’installation des pièces de rechange doit être effectuée par un professionnel qualifié !
- Les groupes de prix indiqués peuvent changer durant la durée de validité de la présente liste des pièces de rechange. Nous vous recommandons donc de vérifier les groupes de prix au moyen de la liste de prix correspondante en vigueur.
- Veuillez trouver en annexe :
  – les traductions de toutes les désignations des pièces utilisées
  – une vue globale des types de chaudières et des pays pour lesquels la présente liste des pièces de rechange est valable.

Italiano

## Avvertenze importanti

- **Attenzione a partire dal primo aprile 2003:**
  I codici d’ordinazione saranno non piú di dieci cifre ma bensi di 11.
  Esempio vecchio: 8710103043
  nuovo: 87101030430
  negli ordini successivi, aggiungere sempre lo zero finale.
- Le parti di ricambio possono essere montate esclusivamente da personale qualificato ed in possesso dei requisiti tecnico-professionali
  (L. 46/90).
- Durante il periodo di validità della presente lista ricambi, i gruppi inerenti i prezzi riportati, possono essere soggetti a cambiamenti. Pertanto, è sempre consigliata una verifica basata sul confronto tra i gruppi prezzi riportati ed il relativo listino prezzi in vigore.
- In appendice sono reperibili:
  – traduzione di ogni descrizione relativa alle varie parti di ricambio
  – elenco di sigle e codici, corrispondente ai vari paesi di destinazione.

Español

## Indicaciones importantes

- **Cambio importante a partir del 1 de Abril de 2003:**
  El código de las piezas de repuesto cambia de 10 a 11 dígitos
  Ejemplo: Código antíguo: 8710103043
  Código nuevo: 87101030430
  Al realizar un pedido, añadir un "0" adicional al final. Todos los despieces con códigos de 10 dígitos continuan siendo válidos.
- Los repuestos solamente deben ser montados por los servicios técnicos oficiales de la marca!
- Los grupos de precios citados pueden sufrir alteraciones durante el período de vigencia de esta lista de repuestos. Recomendamos por ello contrastar los grupos de precios en base a las respectivas listas de precios vigentes.
- En el anexo podrá encontrar:
  – la traducción de todas las denominaciones de piezas empleadas
  – una relación de los tipos de aparato y países en los que se aplica esta lista de repuestos.

Nederlands

## Belangrijke aanwijzing

- **Belangrijk vanaf 1. april 2003**
  Omzetting van een 10 cijferig naar een 11cijferig onderdelen bestelnummer.
  Voorbeeld: oud: 8710103043
  nieuw: 87101030430
  Bij bestellingen altijd een “0” als 11 cijfer ingeven. Alle onderdelenlijsten met 10 cijferige bestelnummers blijven geldig.
- Onderdelen mogen alleen door een erkend installateur worden vervangen!
- De genoemde prijsgroepen uit de onderdelenlijsten kunnen worden vergeleken met de nu geldende prijsgroepenlijst. Aanbevolen wordt de prijslijst te controleren op de nu geldende data.
- In de bijlage vindt u:
  – de vertalingen van de gebruikte onderdelentekeningen
  – een overzicht van toesteltypen en de landen waarvoor deze onderdelenlijst bedoeld is.

**Ersatzteilliste**
**Spare parts list**

**Liste des pièces de rechange**
**Lista parti di ricambio**

**Lista de repuestos**
**Onderdelenlijst**

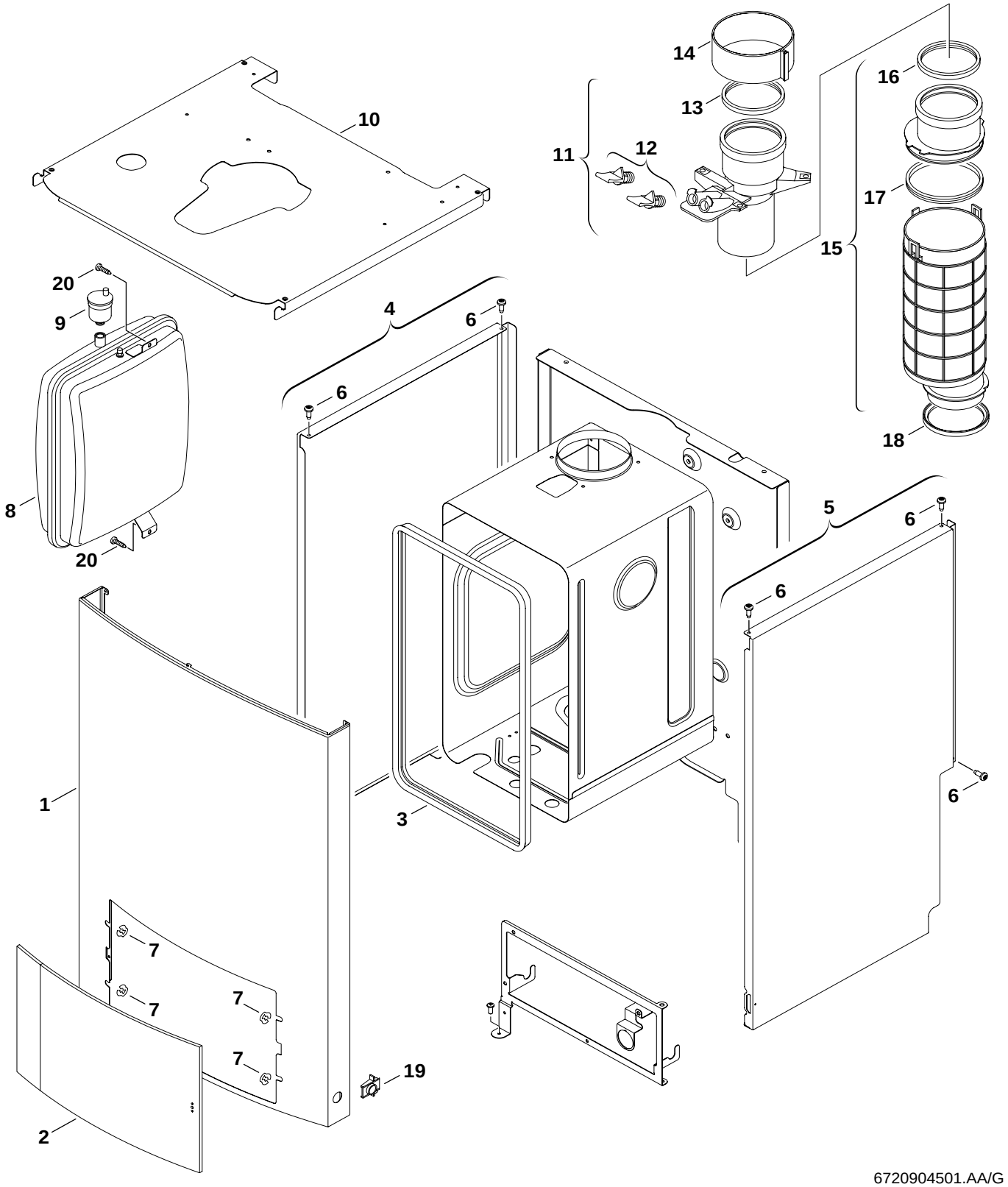


6720904501.AA/G

| | | |
|---|---|---|
| **1** | Blechteile<br>Sheet metal<br>Pièces de tôle<br>Parti di lamiera<br>Piezas de chapa<br>Mantel | **ZBS16/170S-2solarMA**<br>**ZBS16/83S-2MA ZBS16/83S-2MRA**<br>**ZBS22/120S-2MA ZBS22/120S-2MRA**<br>**ZBS30/150S-2MA** |

| Pos | Bezeichnung<br>description<br>dénomination<br>descrizioni<br>descripción<br>benaming | S-Nr. | Bestell-Nr.<br>ordering no.<br>n° d'ordine<br>n° d'ordine<br>número el ordenar<br>bestelnummer | PG | Gasart<br>gas type<br>type gaz<br>tipo gas<br>tipo gas<br>gassoorte | ZBS16/170S-2solarMA | ZBS16/83S-2MA | ZBS16/83S-2MRA | ZBS22/120S-2MA | ZBS22/120S-2MRA | ZBS30/150S-2MA | | | | | | | | | | | | | | Bemerkungen<br>remarks<br>remarques<br>osservazioni<br>observaciones<br>opmerking |
|---|---|---|---|---|---|---|---|---|---|---|---|---|---|---|---|---|---|---|---|---|---|---|---|---|---|
| 1 | Abdeckung | | 8 718 005 880 0 | 50 | | ■ | ■ | ■ | ■ | ■ | ■ | | | | | | | | | | | | | | |
| 2 | Tür | | 8 718 006 948 0 | 38 | | ■ | ■ | ■ | ■ | ■ | ■ | | | | | | | | | | | | | | |
| 3 | Dichtung | | 8 710 703 182 0 | 22 | | ■ | ■ | ■ | ■ | ■ | ■ | | | | | | | | | | | | | | |
| 4 | Seitenblende links | | 8 718 005 896 0 | 38 | | ■ | ■ | ■ | ■ | ■ | ■ | | | | | | | | | | | | | | |
| 5 | Seitenblende rechts | | 8 718 005 897 0 | 38 | | ■ | ■ | ■ | ■ | ■ | ■ | | | | | | | | | | | | | | |
| 6 | Schraube BZ 4,8x13 (10x) | | 2 910 612 432 0 | 11 | | ■ | ■ | ■ | ■ | ■ | ■ | | | | | | | | | | | | | | |
| 7 | Haltefedersatz | | 8 712 000 130 0 | 10 | | ■ | ■ | ■ | ■ | ■ | ■ | | | | | | | | | | | | | | |
| 8 | Ausdehnungsgefäß 18l | | 8 715 407 230 0 | 47 | | ■ | ■ | ■ | ■ | ■ | ■ | | | | | | | | | | | | | | |
| 9 | Schnellentlüfter | | 8 718 505 014 0 | 24 | | ■ | ■ | ■ | ■ | ■ | ■ | | | | | | | | | | | | | | |
| 10 | Abdeckung | | 8 718 005 898 0 | 38 | | ■ | ■ | ■ | ■ | ■ | ■ | | | | | | | | | | | | | | |
| 11 | Abgasstutzen | | 8 710 725 374 0 | 27 | | ■ | ■ | ■ | ■ | ■ | ■ | | | | | | | | | | | | | | |
| 12 | Stopfen | | 8 710 506 199 0 | 15 | | ■ | ■ | ■ | ■ | ■ | ■ | | | | | | | | | | | | | | |
| 13 | Dichtung Ø80 | | 8 711 004 232 0 | 15 | | ■ | ■ | ■ | ■ | ■ | ■ | | | | | | | | | | | | | | |
| 14 | Schelle | | 8 711 301 084 0 | 28 | | ■ | ■ | ■ | ■ | ■ | ■ | | | | | | | | | | | | | | |
| 15 | Abgasrohr | | 8 710 725 373 0 | 28 | | ■ | ■ | ■ | ■ | ■ | ■ | | | | | | | | | | | | | | |
| 16 | Dichtung Ø80 | | 8 711 004 232 0 | 15 | | ■ | ■ | ■ | ■ | ■ | ■ | | | | | | | | | | | | | | |
| 17 | Dichtring | | 8 711 004 278 0 | 14 | | ■ | ■ | ■ | ■ | ■ | ■ | | | | | | | | | | | | | | |
| 18 | Dichtring | | 8 722 933 330 0 | 10 | | ■ | ■ | ■ | ■ | ■ | ■ | | | | | | | | | | | | | | |
| 19 | Verschlusssatz | | 8 712 000 131 0 | 12 | | ■ | ■ | ■ | ■ | ■ | ■ | | | | | | | | | | | | | | |
| 20 | Schraube (10x) | | 2 910 619 454 0 | 16 | | ■ | ■ | ■ | ■ | ■ | ■ | | | | | | | | | | | | | | |

**ZBS16/170S-2solarMA**
**ZBS16/83S-2MA ZBS16/83S-2MRA**
**ZBS22/120S-2MA ZBS22/120S-2MRA**
**ZBS30/150S-2MA**

Blechteile
Sheet metal
Pièces de tôle
Parti di lamiera
Piezas de chapa
Mantel

**1**

| Ersatzteilliste<br>Spare parts list | Liste des pièces de rechange<br>Lista parti di ricambio | Lista de repuestos<br>Onderdelenlijst |
|---|---|---|

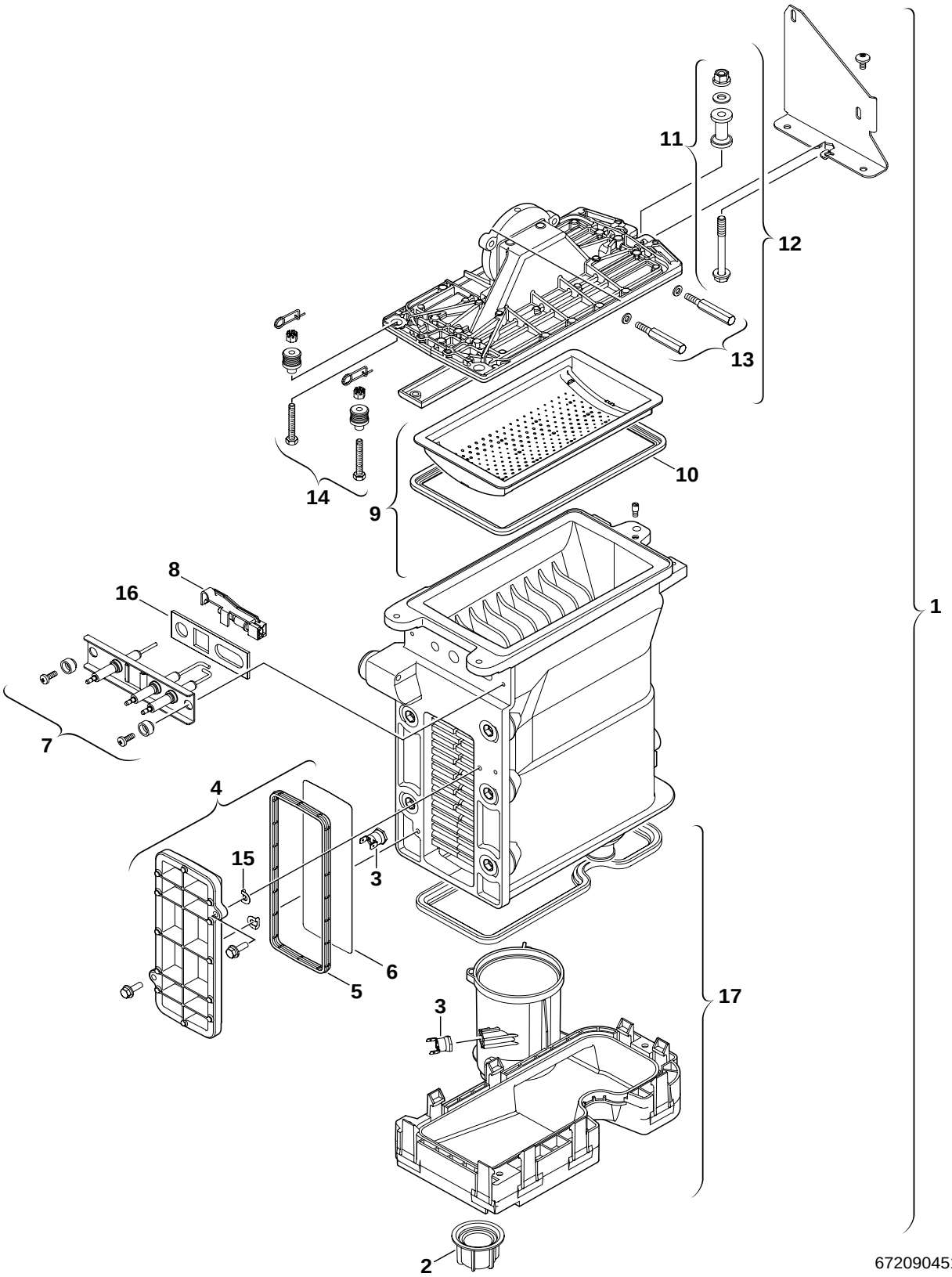


| | |
|---|---|
| **2** Brenner/Wärmeübertrager<br>Burner/Heat exchanger<br>Brûleur/Caloporteur<br>Bruciatore/Blocco lamellare<br>Quemador/Intercambiador de calor<br>Brander/Warmtewisselaar | **ZBS16/170S-2solarMA**<br>**ZBS16/83S-2MA ZBS16/83S-2MRA**<br>**ZBS22/120S-2MA ZBS22/120S-2MRA**<br>**ZBS30/150S-2MA** |

| Pos | Bezeichnung<br>description<br>dénomination<br>descrizioni<br>descripción<br>benaming | S-Nr. | Bestell-Nr.<br>ordering no.<br>n° d'ordine<br>n° d'ordine<br>número el ordenar<br>bestelnummer | PG | Gasart<br>gas type<br>type gaz<br>tipo gas<br>tipo gas<br>gassoorte | ZBS16/170S-2solarMA | ZBS16/83S-2MA | ZBS16/83S-2MRA | ZBS22/120S-2MA | ZBS22/120S-2MRA | ZBS30/150S-2MA | | | | | | | | | | | | | | Bemerkungen<br>remarks<br>remarques<br>osservazioni<br>observaciones<br>opmerking |
|---|---|---|---|---|---|---|---|---|---|---|---|---|---|---|---|---|---|---|---|---|---|---|---|---|---|
| 1 | Wärmeblock | | 8 715 406 999 0 | 62 | | ■ | ■ | ■ | ■ | ■ | ■ | | | | | | | | | | | | | | |
| 2 | Mutter | | 8 713 301 114 0 | 09 | | ■ | ■ | ■ | ■ | ■ | ■ | | | | | | | | | | | | | | |
| 3 | Temperaturbegrenzer | | 8 722 963 858 0 | 23 | | ■ | ■ | ■ | ■ | ■ | ■ | | | | | | | | | | | | | | |
| 4 | Deckel | | 8 711 000 262 0 | 31 | | ■ | ■ | ■ | ■ | ■ | ■ | | | | | | | | | | | | | | |
| 5 | Dichtung | | 8 710 103 153 0 | 14 | | ■ | ■ | ■ | ■ | ■ | ■ | | | | | | | | | | | | | | |
| 6 | Abschirmblech | | 8 718 003 836 0 | 11 | | ■ | ■ | ■ | ■ | ■ | ■ | | | | | | | | | | | | | | |
| 7 | Elektrodensatz | | 8 718 107 078 0 | 31 | | ■ | ■ | ■ | ■ | ■ | ■ | | | | | | | | | | | | | | |
| 8 | Temperaturfühler | | 8 714 500 087 0 | 22 | | ■ | ■ | ■ | ■ | ■ | ■ | | | | | | | | | | | | | | |
| 9 | Brenner | | 8 718 006 658 0 | 51 | | ■ | ■ | ■ | ■ | ■ | ■ | | | | | | | | | | | | | | |
| 10 | Brennerdichtung | | 8 711 004 168 0 | 23 | | ■ | ■ | ■ | ■ | ■ | ■ | | | | | | | | | | | | | | |
| 11 | Befestigungssatz | | 8 710 305 297 0 | 15 | | ■ | ■ | ■ | ■ | ■ | ■ | | | | | | | | | | | | | | |
| 12 | Deckel | | 8 715 406 318 0 | 50 | | ■ | ■ | ■ | ■ | ■ | ■ | | | | | | | | | | | | | | |
| 13 | Befestigungssatz | | 8 729 000 263 0 | 27 | | ■ | ■ | ■ | ■ | ■ | ■ | | | | | | | | | | | | | | |
| 14 | Befestigungssatz | | 8 710 305 296 0 | 29 | | ■ | ■ | ■ | ■ | ■ | ■ | | | | | | | | | | | | | | |
| 15 | Scheibe (10x) | | 8 710 100 190 0 | 22 | | ■ | ■ | ■ | ■ | ■ | ■ | | | | | | | | | | | | | | |
| 16 | Dichtung (10x) | | 8 711 004 264 0 | 25 | | ■ | ■ | ■ | ■ | ■ | ■ | | | | | | | | | | | | | | |
| 17 | Abgassammler | | 8 718 006 944 0 | 33 | | ■ | ■ | ■ | ■ | ■ | ■ | | | | | | | | | | | | | | |

**ZBS16/170S-2solarMA**
**ZBS16/83S-2MA ZBS16/83S-2MRA**
**ZBS22/120S-2MA ZBS22/120S-2MRA**
**ZBS30/150S-2MA**

Brenner/Wärmeübertrager
Burner/Heat exchanger
Brûleur/Caloporteur
Bruciatore/Blocco lamellare
Quemador/Intercambiador de calor
Brander/Warmtewisselaar

**2**

**Ersatzteilliste**
**Spare parts list**

**Liste des pièces de rechange**
**Lista parti di ricambio**

**Lista de repuestos**
**Onderdelenlijst**

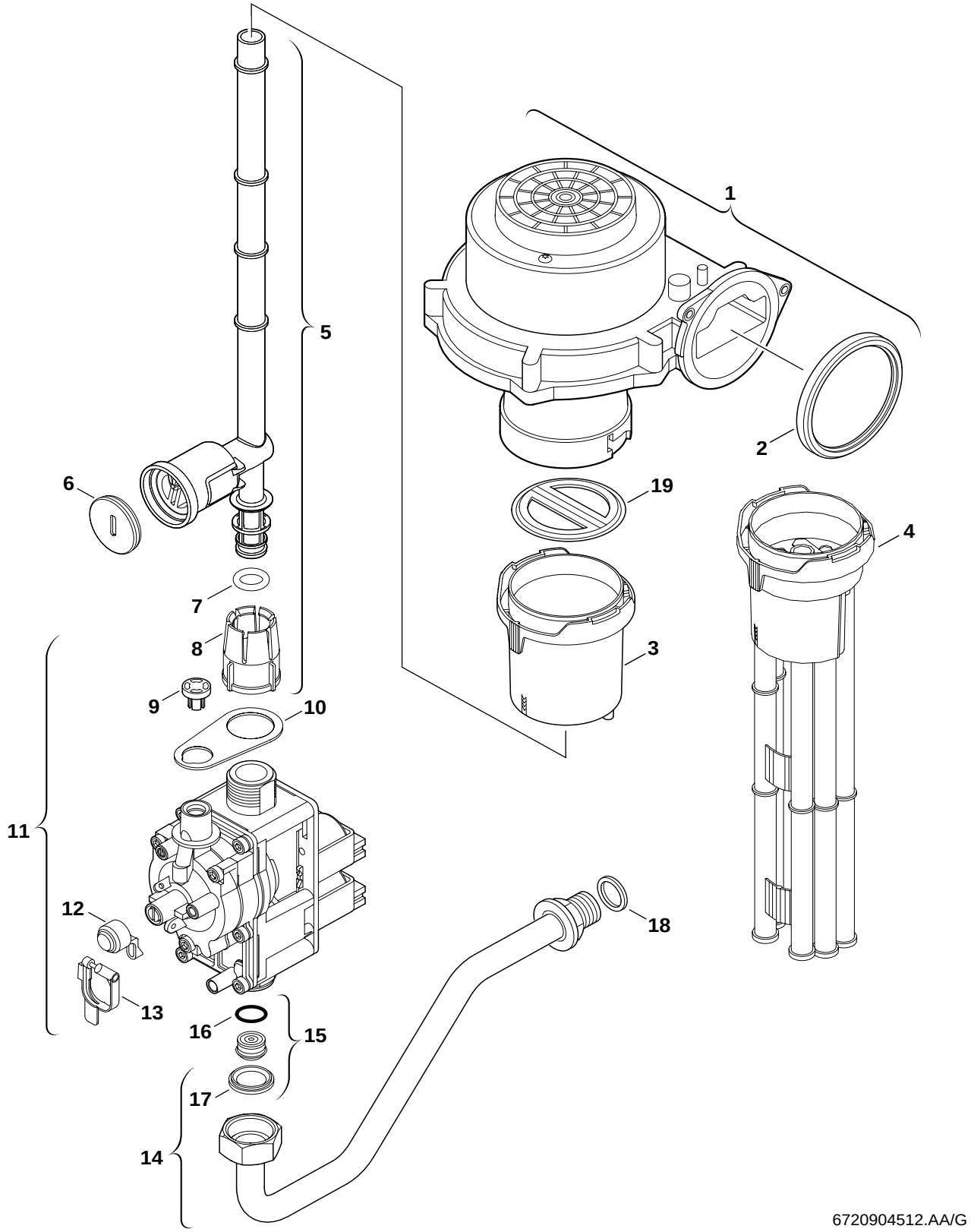


| | |
|---|---|
| **4** Gasarmatur<br>Gas valve<br>Bloc gaz<br>Gruppo gas<br>Cuerpo de gas<br>Gasregelblok | **ZBS16/170S-2solarMA**<br>**ZBS16/83S-2MA ZBS16/83S-2MRA**<br>**ZBS22/120S-2MA ZBS22/120S-2MRA**<br>**ZBS30/150S-2MA** |

| Pos | Bezeichnung<br>description<br>dénomination<br>descrizioni<br>descripción<br>benaming | S-Nr. | Bestell-Nr.<br>ordering no.<br>n° d'ordine<br>n° d'ordine<br>número el ordenar<br>bestelnummer | PG | Gasart<br>gas type<br>type gaz<br>tipo gas<br>tipo gas<br>gassoorte | ZBS16/170S-2solarMA | ZBS16/83S-2MA | ZBS16/83S-2MRA | ZBS22/120S-2MA | ZBS22/120S-2MRA | ZBS30/150S-2MA | | | | | | | | | | | | | | Bemerkungen<br>remarks<br>remarques<br>osservazioni<br>observaciones<br>opmerking |
|---|---|---|---|---|---|---|---|---|---|---|---|---|---|---|---|---|---|---|---|---|---|---|---|---|---|
| 1 | Gebläse | | 8 717 204 373 0 | 51 | | ■ | ■ | ■ | ■ | ■ | ■ | | | | | | | | | | | | | | |
| 2 | Dichtring | | 8 729 000 183 0 | 13 | | ■ | ■ | ■ | ■ | ■ | ■ | | | | | | | | | | | | | | |
| 3 | Luftbegrenzer | | 8 711 000 260 0 | 19 | | ■ | ■ | ■ | | | | | | | | | | | | | | | | | |
| 4 | Luftbegrenzer | | 8 711 000 257 0 | 21 | | | | | ■ | ■ | ■ | | | | | | | | | | | | | | |
| 5 | Gasrohr | | 8 710 725 500 0 | 23 | | | | | ■ | ■ | ■ | | | | | | | | | | | | | | |
| 5 | Gasrohr | | 8 710 725 502 0 | 24 | | ■ | ■ | ■ | | | | | | | | | | | | | | | | | |
| 6 | Plombe (10x) | | 8 712 305 092 0 | 15 | | ■ | ■ | ■ | ■ | ■ | ■ | | | | | | | | | | | | | | |
| 7 | O-Ring (10x) | | 8 710 205 089 0 | 11 | | ■ | ■ | ■ | ■ | ■ | ■ | | | | | | | | | | | | | | |
| 8 | Überwurfmutter | | 8 713 301 117 0 | 09 | | ■ | ■ | ■ | ■ | ■ | ■ | | | | | | | | | | | | | | |
| 9 | Kappe (10x) | | 8 715 503 344 0 | 12 | | ■ | ■ | ■ | ■ | ■ | ■ | | | | | | | | | | | | | | |
| 10 | Dichtung | | 8 710 103 165 0 | 05 | | ■ | ■ | ■ | ■ | ■ | ■ | | | | | | | | | | | | | | |
| 11 | Gasarmatur CE427 | | 8 747 003 773 0 | 47 | | ■ | ■ | ■ | ■ | ■ | ■ | | | | | | | | | | | | | | |
| 11 | Gasarmatur CE427 | 5000,5200 | 8 747 003 508 0 | 47 | | | ■ | | ■ | | ■ | | | | | | | | | | | | | | |
| 11 | Gasarmatur CE427 | 5300 | 8 747 003 508 0 | 47 | | | ■ | | ■ | | ■ | | | | | | | | | | | | | | |
| 11 | Gasarmatur CE427 | 6000 | 8 747 003 508 0 | 47 | | | | | | | ■ | | | | | | | | | | | | | | |
| 11 | Gasarmatur CE427 | 6100 | 8 747 003 508 0 | 47 | | | | | ■ | | ■ | | | | | | | | | | | | | | |
| 11 | Gasarmatur CE427 | 7100,7400 | 8 747 003 508 0 | 47 | | | | | | | ■ | | | | | | | | | | | | | | |
| 11 | Gasarmatur CE427 | 7200 | 8 747 003 508 0 | 47 | | | | | ■ | | | | | | | | | | | | | | | | |
| 12 | Kappe (10x) | | 8 710 506 117 0 | 15 | | ■ | ■ | ■ | ■ | ■ | ■ | | | | | | | | | | | | | | |
| 13 | Plombe (10x) | | 8 712 305 023 0 | 15 | | ■ | ■ | ■ | ■ | ■ | ■ | | | | | | | | | | | | | | |
| 14 | Gaszuführungsrohr | | 8 710 735 205 0 | 38 | | ■ | ■ | ■ | ■ | ■ | ■ | | | | | | | | | | | | | | |
| 15 | Drosselbuchse (38) | | 8 710 303 073 0 | 24 | 31 | | | ■ | | ■ | | | | | | | | | | | | | | | |
| 15 | Drosselbuchse (27) | | 8 710 303 074 0 | 24 | 21,23 | | ■ | | | | | | | | | | | | | | | | | | |
| 16 | O-Ring (10x) | | 8 710 205 062 0 | 11 | | ■ | ■ | ■ | ■ | ■ | ■ | | | | | | | | | | | | | | |
| 17 | Dichtscheibe 3/4" (10x) | | 8 710 103 043 0 | 12 | | ■ | ■ | ■ | ■ | ■ | ■ | | | | | | | | | | | | | | |
| 18 | Dichtscheibe 1/2" (10x) | | 8 710 103 045 0 | 11 | | ■ | ■ | ■ | ■ | ■ | ■ | | | | | | | | | | | | | | |
| 19 | Membranteller | 5000,5200 | 8 715 505 801 0 | 19 | | | ■ | | ■ | | ■ | | | | | | | | | | | | | | |
| 19 | Membranteller | 6000 | 8 715 505 801 0 | 19 | | | | | | | ■ | | | | | | | | | | | | | | |
| 19 | Membranteller | 6100 | 8 715 505 801 0 | 19 | | | | | ■ | | ■ | | | | | | | | | | | | | | |
| 19 | Membranteller | 7100,7400 | 8 715 505 801 0 | 19 | | | | | | | ■ | | | | | | | | | | | | | | |
| 19 | Membranteller | 7200 | 8 715 505 801 0 | 19 | | | | | ■ | | | | | | | | | | | | | | | | |
| 19 | Membranteller | 5300 | 8 715 505 883 0 | 21 | | | ■ | | ■ | | ■ | | | | | | | | | | | | | | |
| | Gasartumbausatz 23>31 | 5300 | 8 719 001 072 0 | | | | ■ | | | | | | | | | | | | | | | | | | |
| | Gasartumbausatz 23>31 | 5300 | 8 719 001 073 0 | | | | | | ■ | | | | | | | | | | | | | | | | |
| | Gasartumbausatz 23>31 | 5300 | 8 719 001 074 0 | | | | | | | | ■ | | | | | | | | | | | | | | |

**ZBS16/170S-2solarMA**
**ZBS16/83S-2MA ZBS16/83S-2MRA**
**ZBS22/120S-2MA ZBS22/120S-2MRA**
**ZBS30/150S-2MA**

Gasarmatur
Gas valve
Bloc gaz
Gruppo gas
Cuerpo de gas
Gasregelblok

**4**

| Ersatzteilliste<br>Spare parts list | Liste des pièces de rechange<br>Lista parti di ricambio | Lista de repuestos<br>Onderdelenlijst |
|---|---|---|

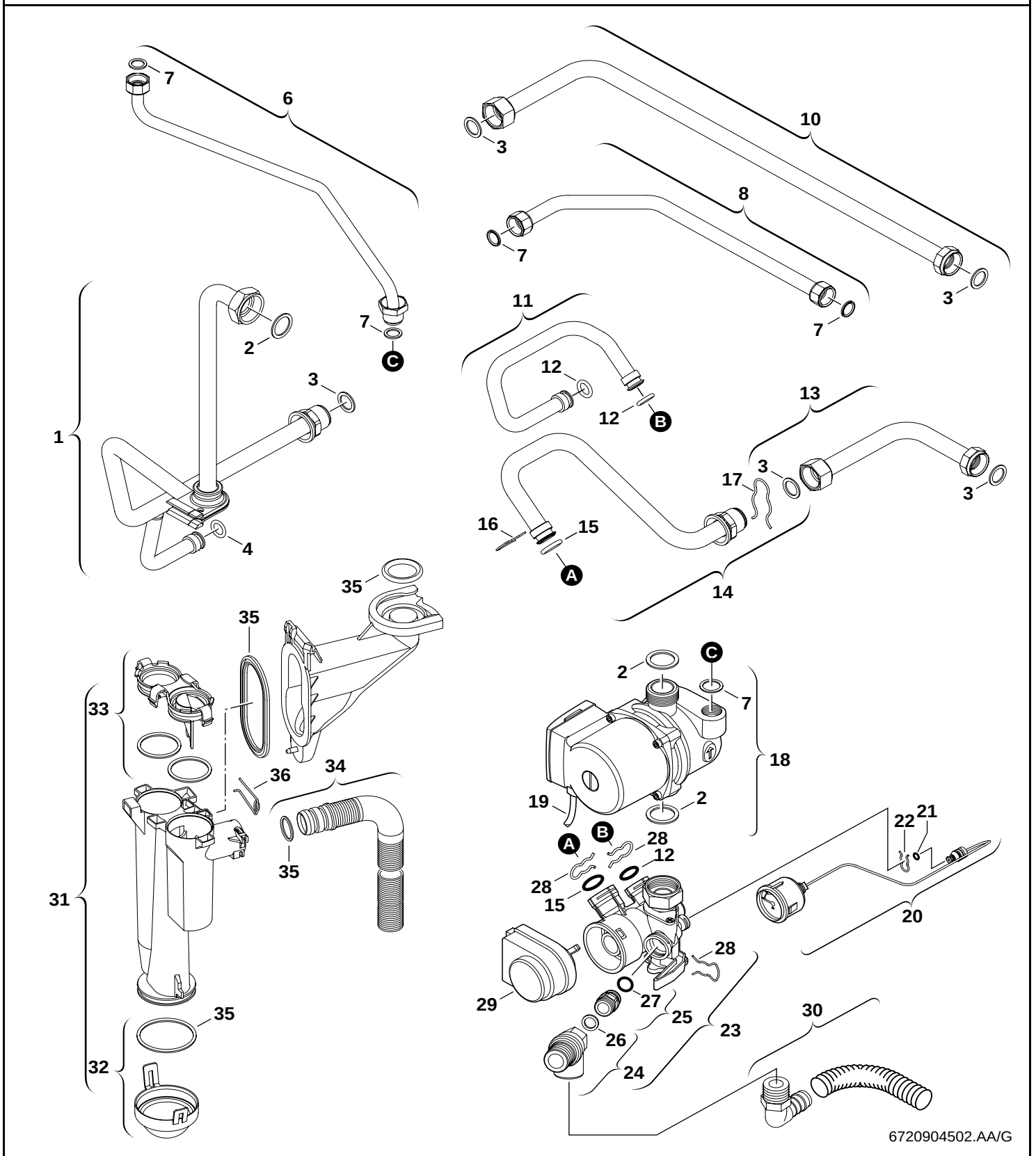


| | |
|---|---|
| **5** Pumpe/Rohre<br>Pump/Tubes<br>Pompe/Tubes<br>Pompa/Raccordi<br>Bomba/Tubos<br>Pomp/Pijps | **ZBS16/170S-2solarMA**<br>**ZBS16/83S-2MA ZBS16/83S-2MRA**<br>**ZBS22/120S-2MA ZBS22/120S-2MRA**<br>**ZBS30/150S-2MA** |

| Pos | Bezeichnung<br>description<br>dénomination<br>descrizioni<br>descripción<br>benaming | S-Nr. | Bestell-Nr.<br>ordering no.<br>n° d'ordine<br>n° d'ordine<br>número el ordenar<br>bestelnummer | PG | Gasart<br>gas type<br>type gaz<br>tipo gas<br>tipo gas<br>gassoorte | ZBS16/170S-2solarMA | ZBS16/83S-2MA | ZBS16/83S-2MRA | ZBS22/120S-2MA | ZBS22/120S-2MRA | ZBS30/150S-2MA | | | | | | | | | | | | | | Bemerkungen<br>remarks<br>remarques<br>osservazioni<br>observaciones<br>opmerking |
|---|---|---|---|---|---|---|---|---|---|---|---|---|---|---|---|---|---|---|---|---|---|---|---|---|---|
| 1 | Rohr | | 8 710 735 345 0 | 40 | | ■ | ■ | ■ | ■ | ■ | ■ | | | | | | | | | | | | | | |
| 2 | Dichtscheibe 1" (10x) | | 8 710 103 046 0 | 12 | | ■ | ■ | ■ | ■ | ■ | ■ | | | | | | | | | | | | | | |
| 3 | Dichtscheibe 3/4" (10x) | | 8 710 103 043 0 | 12 | | ■ | ■ | ■ | ■ | ■ | ■ | | | | | | | | | | | | | | |
| 4 | O-Ring (10x) | | 8 716 771 155 0 | 22 | | ■ | ■ | ■ | ■ | ■ | ■ | | | | | | | | | | | | | | |
| 6 | Entlüftungsleitung | | 8 710 725 630 0 | 28 | | ■ | ■ | ■ | ■ | ■ | ■ | | | | | | | | | | | | | | |
| 7 | Dichtscheibe 1/2" (10x) | | 8 710 103 045 0 | 11 | | ■ | ■ | ■ | ■ | ■ | ■ | | | | | | | | | | | | | | |
| 8 | Rohr | | 8 710 735 340 0 | 30 | | ■ | ■ | ■ | ■ | ■ | ■ | | | | | | | | | | | | | | |
| 10 | Anschlussrohr | | 8 710 735 341 0 | 26 | | ■ | ■ | ■ | ■ | ■ | ■ | | | | | | | | | | | | | | |
| 11 | Rohr | | 8 710 735 337 0 | 33 | | ■ | ■ | ■ | ■ | ■ | ■ | | | | | | | | | | | | | | |
| 12 | O-Ring (10x) | | 8 716 771 155 0 | 22 | | ■ | ■ | ■ | ■ | ■ | ■ | | | | | | | | | | | | | | |
| 13 | Anschlussrohr | | 8 710 735 342 0 | 26 | | ■ | ■ | ■ | ■ | ■ | ■ | | | | | | | | | | | | | | |
| 14 | Rücklaufrohr | | 8 710 725 751 0 | 31 | | ■ | ■ | ■ | ■ | ■ | ■ | | | | | | | | | | | | | | |
| 15 | O-Ring (10x) | | 8 710 205 085 0 | 12 | | ■ | ■ | ■ | ■ | ■ | ■ | | | | | | | | | | | | | | |
| 16 | Haltefeder (10x) | | 8 711 200 016 0 | 11 | | ■ | ■ | ■ | ■ | ■ | ■ | | | | | | | | | | | | | | |
| 17 | Haltefeder (10x) | | 8 714 606 002 0 | 17 | | ■ | ■ | ■ | ■ | ■ | ■ | | | | | | | | | | | | | | |
| 18 | Pumpe | | 8 717 204 350 0 | 52 | | | | | | | ■ | | | | | | | | | | | | | | |
| 18 | Pumpe | | 8 717 204 384 0 | 47 | | ■ | ■ | ■ | ■ | ■ | | | | | | | | | | | | | | | |
| 19 | Pumpenkabel | | 8 714 401 896 0 | 28 | | ■ | ■ | ■ | ■ | ■ | ■ | | | | | | | | | | | | | | |
| 20 | Manometer | | 8 717 208 079 0 | 27 | | ■ | ■ | ■ | ■ | ■ | ■ | | | | | | | | | | | | | | |
| 21 | O-Ring (10x) | | 8 710 205 087 0 | 11 | | ■ | ■ | ■ | ■ | ■ | ■ | | | | | | | | | | | | | | |
| 22 | Haltefeder (10x) | | 8 711 200 015 0 | 12 | | ■ | ■ | ■ | ■ | ■ | ■ | | | | | | | | | | | | | | |
| 23 | 3-Wegeventil | | 8 717 010 062 0 | 43 | | ■ | ■ | ■ | ■ | ■ | ■ | | | | | | | | | | | | | | |
| 24 | Sicherheitsventil 3bar | | 8 717 401 012 0 | 24 | | ■ | ■ | ■ | ■ | ■ | ■ | | | | | | | | | | | | | | |
| 25 | Adapter | | 8 715 504 474 0 | 25 | | ■ | ■ | ■ | ■ | ■ | ■ | | | | | | | | | | | | | | |
| 26 | Dichtscheibe (10x) | | 8 730 203 998 0 | 16 | | ■ | ■ | ■ | ■ | ■ | ■ | | | | | | | | | | | | | | |
| 27 | O-Ring (10x) | | 8 710 205 086 0 | 11 | | ■ | ■ | ■ | ■ | ■ | ■ | | | | | | | | | | | | | | |
| 28 | Haltefeder (10x) | | 8 711 200 016 0 | 11 | | ■ | ■ | ■ | ■ | ■ | ■ | | | | | | | | | | | | | | |
| 29 | Motor | | 8 717 204 345 0 | 38 | | ■ | ■ | ■ | ■ | ■ | ■ | | | | | | | | | | | | | | |
| 30 | Schlauch | | 8 710 725 760 0 | 22 | | ■ | ■ | ■ | ■ | ■ | ■ | | | | | | | | | | | | | | |
| 31 | Siphon | | 8 710 506 254 0 | 38 | | ■ | ■ | ■ | ■ | ■ | ■ | | | | | | | | | | | | | | |
| 32 | Kappe | | 8 715 405 189 0 | 16 | | ■ | ■ | ■ | ■ | ■ | ■ | | | | | | | | | | | | | | |
| 33 | Deckel | | 8 715 405 188 0 | 16 | | ■ | ■ | ■ | ■ | ■ | ■ | | | | | | | | | | | | | | |
| 34 | Wellrohr | | 8 715 504 532 0 | 18 | | ■ | ■ | ■ | ■ | ■ | ■ | | | | | | | | | | | | | | |
| 35 | O-Ring | | 8 710 205 097 0 | 19 | | ■ | ■ | ■ | ■ | ■ | ■ | | | | | | | | | | | | | | |
| 36 | Haltefeder (10x) | | 8 716 771 169 0 | 12 | | ■ | ■ | ■ | ■ | ■ | ■ | | | | | | | | | | | | | | |

**ZBS16/170S-2solarMA**
**ZBS16/83S-2MA ZBS16/83S-2MRA**
**ZBS22/120S-2MA ZBS22/120S-2MRA**
**ZBS30/150S-2MA**

Pumpe/Rohre
Pump/Tubes
Pompe/Tubes
Pompa/Raccordi
Bomba/Tubos
Pomp/Pijps

**5**

| Ersatzteilliste<br>Spare parts list | Liste des pièces de rechange<br>Lista parti di ricambio | Lista de repuestos<br>Onderdelenlijst |
|---|---|---|

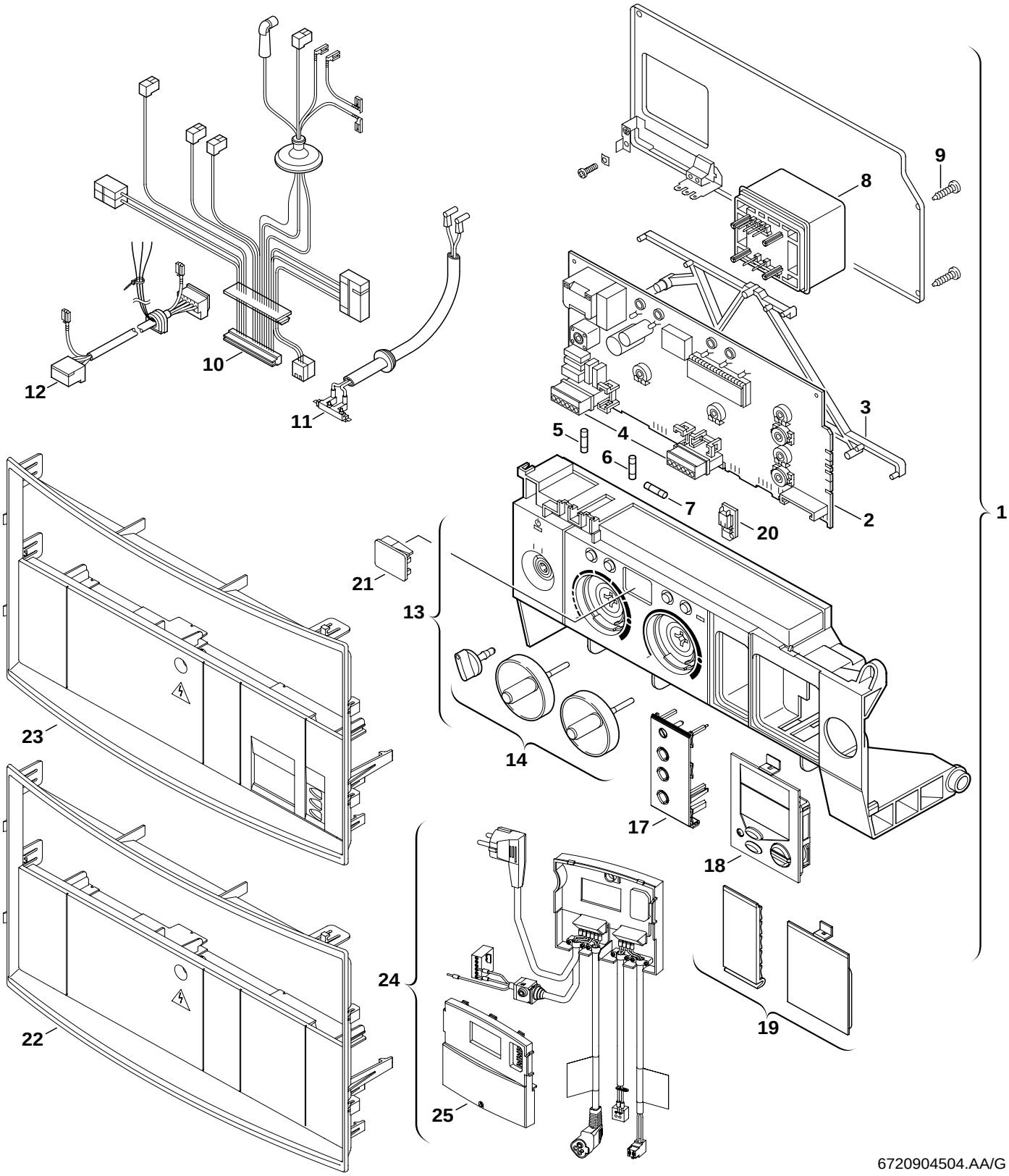


| | | |
|---|---|---|
| **6** | Schaltkasten<br>Control box<br>Tableau de commande<br>Quadro comandi<br>Caja de conexiones<br>Schakelkast | **ZBS16/170S-2solarMA**<br>**ZBS16/83S-2MA ZBS16/83S-2MRA**<br>**ZBS22/120S-2MA ZBS22/120S-2MRA**<br>**ZBS30/150S-2MA** |

| Pos | Bezeichnung<br>description<br>dénomination<br>descrizioni<br>descripción<br>benaming | S-Nr. | Bestell-Nr.<br>ordering no.<br>n° d'ordine<br>n° d'ordine<br>número el ordenar<br>bestelnummer | PG | Gasart<br>gas type<br>type gaz<br>tipo gas<br>tipo gas<br>gassoorte | ZBS16/170S-2solarMA | ZBS16/83S-2MA | ZBS16/83S-2MRA | ZBS22/120S-2MA | ZBS22/120S-2MRA | ZBS30/150S-2MA | | | | | | | | | | | | | | Bemerkungen<br>remarks<br>remarques<br>osservazioni<br>observaciones<br>opmerking |
|---|---|---|---|---|---|---|---|---|---|---|---|---|---|---|---|---|---|---|---|---|---|---|---|---|---|
| 1 | Steuergerät GZT5b | | 8 717 207 636 0 | 53 | | ■ | ■ | | ■ | | | | | | | | | | | | | | | | |
| 1 | Steuergerät | | 8 717 207 645 0 | 57 | | | | ■ | | ■ | | | | | | | | | | | | | | | |
| 1 | Steuergerät | | 8 717 207 650 0 | 51 | | | | | | | ■ | | | | | | | | | | | | | | |
| 2 | Leiterplatte | | 8 748 300 498 0 | 51 | | | | | | | ■ | | | | | | | | | | | | | | |
| 2 | Leiterplatte | | 8 748 300 512 0 | 53 | | ■ | ■ | ■ | ■ | ■ | | | | | | | | | | | | | | | |
| 3 | Abstandhalter (10x) | | 8 711 503 197 0 | 22 | | ■ | ■ | ■ | ■ | ■ | ■ | | | | | | | | | | | | | | |
| 4 | Steckersatz | | 8 714 404 226 0 | 22 | | ■ | ■ | ■ | ■ | ■ | ■ | | | | | | | | | | | | | | |
| 5 | Sicherung T2,5A (10x) | | 1 904 521 342 0 | 20 | | ■ | ■ | ■ | ■ | ■ | ■ | | | | | | | | | | | | | | |
| 6 | Sicherung T0,5A (10x) | | 1 904 522 730 0 | 15 | | ■ | ■ | ■ | ■ | ■ | ■ | | | | | | | | | | | | | | |
| 7 | Sicherung T1,6A (10x) | | 1 904 522 740 0 | 15 | | ■ | ■ | ■ | ■ | ■ | ■ | | | | | | | | | | | | | | |
| 8 | Transformator | | 8 747 201 358 0 | 32 | | ■ | ■ | ■ | ■ | ■ | ■ | | | | | | | | | | | | | | |
| 9 | Schraube (10x) | | 8 713 403 013 0 | 12 | | ■ | ■ | ■ | ■ | ■ | ■ | | | | | | | | | | | | | | |
| 10 | Kabelbaum | | 8 714 402 086 0 | 36 | | ■ | ■ | ■ | ■ | ■ | ■ | | | | | | | | | | | | | | |
| 11 | Zündkabel | | 8 714 401 999 0 | 31 | | ■ | ■ | ■ | ■ | ■ | ■ | | | | | | | | | | | | | | |
| 12 | Pumpenkabel | | 8 714 411 321 0 | 29 | | ■ | ■ | ■ | ■ | ■ | ■ | | | | | | | | | | | | | | |
| 13 | Gehäuse hellgrau | | 8 717 207 478 0 | 39 | | ■ | ■ | ■ | ■ | ■ | ■ | | | | | | | | | | | | | | |
| 14 | Drehgriffe hellgrau | | 8 712 000 104 0 | 26 | | ■ | ■ | ■ | ■ | ■ | ■ | | | | | | | | | | | | | | |
| 17 | TA211E/C1 | | 8 747 207 187 0 | 55 | | | | ■ | | ■ | | | | | | | | | | | | | | | |
| 18 | DT2 telegrau | | 7 719 002 016 | | | | | ■ | | ■ | | | | | | | | | | | | | | | |
| 19 | Blende hellgrau | | 8 711 000 276 0 | 14 | | ■ | ■ | | ■ | | ■ | | | | | | | | | | | | | | |
| 20 | Kodierstecker (12) | | 8 714 411 012 0 | 14 | | | | | ■ | ■ | | | | | | | | | | | | | | | |
| 20 | Kodierstecker | | 8 714 430 427 0 | 15 | | | | | | | ■ | | | | | | | | | | | | | | |
| 21 | Sichtfenster | | 8 715 506 166 0 | 10 | | ■ | ■ | ■ | ■ | ■ | ■ | | | | | | | | | | | | | | |
| 22 | Blende | | 8 715 503 566 0 | 30 | | | ■ | ■ | ■ | ■ | ■ | | | | | | | | | | | | | | |
| 23 | Blende | | 8 715 503 567 0 | 30 | | ■ | | | | | | | | | | | | | | | | | | | |
| 24 | Regler | | 8 715 402 473 0 | 53 | | ■ | | | | | | | | | | | | | | | | | | | |
| 25 | Abdeckung | | 8 715 503 565 0 | 30 | | ■ | | | | | | | | | | | | | | | | | | | |
| | Sicherungssatz T0,5/T1,6/T2,5/T3,15A | | 8 744 503 010 0 | 11 | | ■ | ■ | ■ | ■ | ■ | ■ | | | | | | | | | | | | | | |

**ZBS16/170S-2solarMA**
**ZBS16/83S-2MA ZBS16/83S-2MRA**
**ZBS22/120S-2MA ZBS22/120S-2MRA**
**ZBS30/150S-2MA**

Schaltkasten
Control box
Tableau de commande
Quadro comandi
Caja de conexiones
Schakelkast

**6**

**Ersatzteilliste**
**Spare parts list**

**Liste des pièces de rechange**
**Lista parti di ricambio**

**Lista de repuestos**
**Onderdelenlijst**

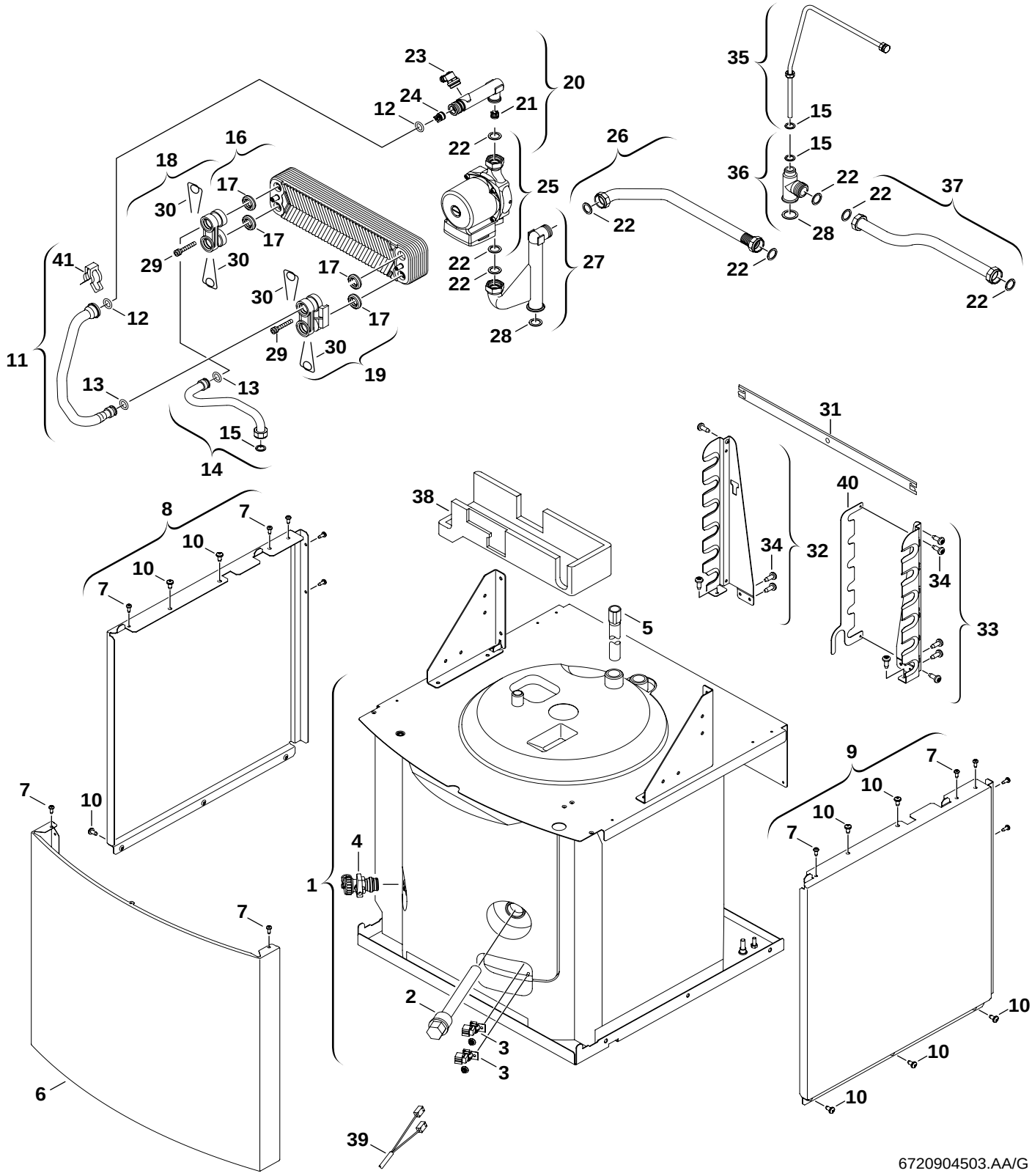


| | |
|---|---|
| **7** **A** Speicherbehälter<br>Storage tank<br>Ballon<br>Bollitore<br>Déposito<br>Voorraadvat | **ZBS16/83S-2MA ZBS16/83S-2MRA**<br>**ZBS22/120S-2MA ZBS22/120S-2MRA**<br>**ZBS30/150S-2MA** |

| Pos | Bezeichnung<br>description<br>dénomination<br>descrizioni<br>descripción<br>benaming | S-Nr. | Bestell-Nr.<br>ordering no.<br>n° d'ordine<br>n° d'ordine<br>número el ordenar<br>bestelnummer | PG | Gasart<br>gas type<br>type gaz<br>tipo gas<br>tipo gas<br>gassoorte | ZBS16/83S-2MA | ZBS16/83S-2MRA | ZBS22/120S-2MA | ZBS22/120S-2MRA | ZBS30/150S-2MA | | | | | | | | | | | | | | | Bemerkungen<br>remarks<br>remarques<br>osservazioni<br>observaciones<br>opmerking |
|---|---|---|---|---|---|---|---|---|---|---|---|---|---|---|---|---|---|---|---|---|---|---|---|---|---|
| 1 | Behälter 83 L | | 8 715 407 299 0 | 62 | | ■ | ■ | | | | | | | | | | | | | | | | | | |
| 1 | Behälter 120 l | | 8 715 407 307 0 | 65 | | | | ■ | ■ | | | | | | | | | | | | | | | | |
| 1 | Behälter 150 L | | 8 715 407 312 0 | 66 | | | | | | ■ | | | | | | | | | | | | | | | |
| 2 | Anode | | 8 718 505 037 0 | 34 | | ■ | ■ | ■ | ■ | ■ | | | | | | | | | | | | | | | |
| 3 | Temperaturfühler | | 8 714 500 123 0 | 25 | | ■ | ■ | ■ | ■ | ■ | | | | | | | | | | | | | | | |
| 4 | KFE-Hahn Zub.Nr845 | | 7 719 002 007 | | | ■ | ■ | ■ | ■ | ■ | | | | | | | | | | | | | | | |
| 5 | Einlauf/Auslaufrohr | | 8 710 703 223 0 | 33 | | ■ | ■ | ■ | ■ | ■ | | | | | | | | | | | | | | | |
| 6 | Abdeckung | | 8 718 005 914 0 | 42 | | ■ | ■ | | | | | | | | | | | | | | | | | | |
| 6 | Abdeckung | | 8 718 005 915 0 | 42 | | | | ■ | ■ | | | | | | | | | | | | | | | | |
| 6 | Abdeckung | | 8 718 005 916 0 | 44 | | | | | | ■ | | | | | | | | | | | | | | | |
| 7 | Schraube BZ 4,8x13 (10x) | | 2 910 612 432 0 | 11 | | ■ | ■ | ■ | ■ | ■ | | | | | | | | | | | | | | | |
| 8 | Seitenwand links | | 8 715 407 319 0 | 40 | | ■ | ■ | | | | | | | | | | | | | | | | | | |
| 8 | Seitenwand links | | 8 718 005 899 0 | 40 | | | | ■ | ■ | | | | | | | | | | | | | | | | |
| 8 | Seitenwand links | | 8 718 005 901 0 | 42 | | | | | | ■ | | | | | | | | | | | | | | | |
| 9 | Seitenwand rechts | | 8 715 407 320 0 | 40 | | ■ | ■ | | | | | | | | | | | | | | | | | | |
| 9 | Seitenwand rechts | | 8 718 005 900 0 | 40 | | | | ■ | ■ | | | | | | | | | | | | | | | | |
| 9 | Seitenwand rechts | | 8 718 005 902 0 | 42 | | | | | | ■ | | | | | | | | | | | | | | | |
| 10 | Schraube (10x) | | 2 910 619 454 0 | 16 | | ■ | ■ | ■ | ■ | ■ | | | | | | | | | | | | | | | |
| 11 | Rohr | | 8 710 735 339 0 | 35 | | ■ | ■ | ■ | ■ | ■ | | | | | | | | | | | | | | | |
| 12 | O-Ring 17x4 (10x) | | 8 716 771 154 0 | 12 | | ■ | ■ | ■ | ■ | ■ | | | | | | | | | | | | | | | |
| 13 | O-Ring (10x) | | 8 716 771 155 0 | 22 | | ■ | ■ | ■ | ■ | ■ | | | | | | | | | | | | | | | |
| 14 | Rohr | | 8 710 735 338 0 | 30 | | ■ | ■ | ■ | ■ | ■ | | | | | | | | | | | | | | | |
| 15 | Dichtscheibe 1/2" (10x) | | 8 710 103 045 0 | 11 | | ■ | ■ | ■ | ■ | ■ | | | | | | | | | | | | | | | |
| 16 | Wärmeübertrager | | 8 716 106 436 0 | 42 | | ■ | ■ | ■ | ■ | ■ | | | | | | | | | | | | | | | |
| 17 | Dichtung | | 8 716 106 435 0 | 15 | | ■ | ■ | ■ | ■ | ■ | | | | | | | | | | | | | | | |
| 18 | Anschlussbuchse | | 8 710 305 385 0 | 16 | | ■ | ■ | ■ | ■ | ■ | | | | | | | | | | | | | | | |
| 19 | Anschlussbuchse | | 8 710 305 387 0 | 16 | | ■ | ■ | ■ | ■ | ■ | | | | | | | | | | | | | | | |
| 20 | Verschraubung | | 8 713 305 762 0 | 40 | | ■ | ■ | ■ | ■ | ■ | | | | | | | | | | | | | | | |
| 21 | Drosselbuchse | | 8 713 306 044 0 | 12 | 21,23 | | | ■ | ■ | ■ | | | | | | | | | | | | | | | |
| 21 | Drosselbuchse | | 8 713 306 045 0 | 12 | 21,23 | ■ | ■ | | | | | | | | | | | | | | | | | | |
| 22 | Dichtscheibe 3/4" (10x) | | 8 710 103 043 0 | 12 | | ■ | ■ | ■ | ■ | ■ | | | | | | | | | | | | | | | |
| 23 | Entlüftungsventil | | 8 717 405 285 0 | 21 | | ■ | ■ | ■ | ■ | ■ | | | | | | | | | | | | | | | |
| 24 | Rückflußverhinderer | | 8 718 505 023 0 | 17 | | ■ | ■ | ■ | ■ | ■ | | | | | | | | | | | | | | | |
| 25 | Pumpe | | 8 717 204 449 0 | 49 | | ■ | ■ | ■ | ■ | ■ | | | | | | | | | | | | | | | |
| 26 | Anschlussrohr | | 8 710 735 344 0 | 28 | | ■ | ■ | ■ | ■ | ■ | | | | | | | | | | | | | | | |
| 27 | Anschlussrohr | | 8 713 305 756 0 | 40 | | ■ | ■ | ■ | ■ | ■ | | | | | | | | | | | | | | | |
| 28 | Dichtscheibe 1" (10x) | | 8 710 103 213 0 | 15 | | ■ | ■ | ■ | ■ | ■ | | | | | | | | | | | | | | | |
| 29 | Schraube | | 8 716 106 452 0 | 14 | | ■ | ■ | ■ | ■ | ■ | | | | | | | | | | | | | | | |
| 30 | Haltefeder (10x) | | 8 716 771 169 0 | 12 | | ■ | ■ | ■ | ■ | ■ | | | | | | | | | | | | | | | |
| 31 | Halter | | 8 718 003 971 0 | 21 | | ■ | ■ | ■ | ■ | ■ | | | | | | | | | | | | | | | |
| 32 | Haltewinkel | | 8 711 304 823 0 | 23 | | ■ | ■ | ■ | ■ | ■ | | | | | | | | | | | | | | | |
| 33 | Haltewinkel | | 8 711 304 824 0 | 23 | | ■ | ■ | ■ | ■ | ■ | | | | | | | | | | | | | | | |
| 34 | Schraube BZ 4,8x13 (10x) | | 2 910 612 432 0 | 11 | | ■ | ■ | ■ | ■ | ■ | | | | | | | | | | | | | | | |
| 35 | Anschlussrohr | | 8 710 735 365 0 | 30 | | ■ | ■ | ■ | ■ | ■ | | | | | | | | | | | | | | | |
| 36 | Anschlussrohr | | 8 713 305 757 0 | 35 | | ■ | ■ | ■ | ■ | ■ | | | | | | | | | | | | | | | |
| 37 | Anschlussrohr | | 8 710 735 344 0 | 28 | | ■ | ■ | ■ | ■ | ■ | | | | | | | | | | | | | | | |
| 38 | Isolierung | | 8 711 304 828 0 | 16 | | ■ | ■ | ■ | ■ | ■ | | | | | | | | | | | | | | | |
| 39 | Kabel | | 8 714 402 124 0 | 29 | | ■ | ■ | ■ | ■ | ■ | | | | | | | | | | | | | | | |
| 40 | Halteblech | | 8 718 005 913 0 | 21 | | ■ | ■ | ■ | ■ | ■ | | | | | | | | | | | | | | | |
| 41 | Klammer (10x) | | 8 711 200 024 0 | 22 | | ■ | ■ | ■ | ■ | ■ | | | | | | | | | | | | | | | |
| | | | | | | | | | | | | | | | | | | | | | | | | | |
| | | | | | | | | | | | | | | | | | | | | | | | | | |

**ZBS16/83S-2MA ZBS16/83S-2MRA**
**ZBS22/120S-2MA ZBS22/120S-2MRA**
**ZBS30/150S-2MA**

Speicherbehälter
Storage tank
Ballon
Bollitore
Déposito
Voorraadvat

**7A**

**Ersatzteilliste**
**Spare parts list**

**Liste des pièces de rechange**
**Lista parti di ricambio**

**Lista de repuestos**
**Onderdelenlijst**

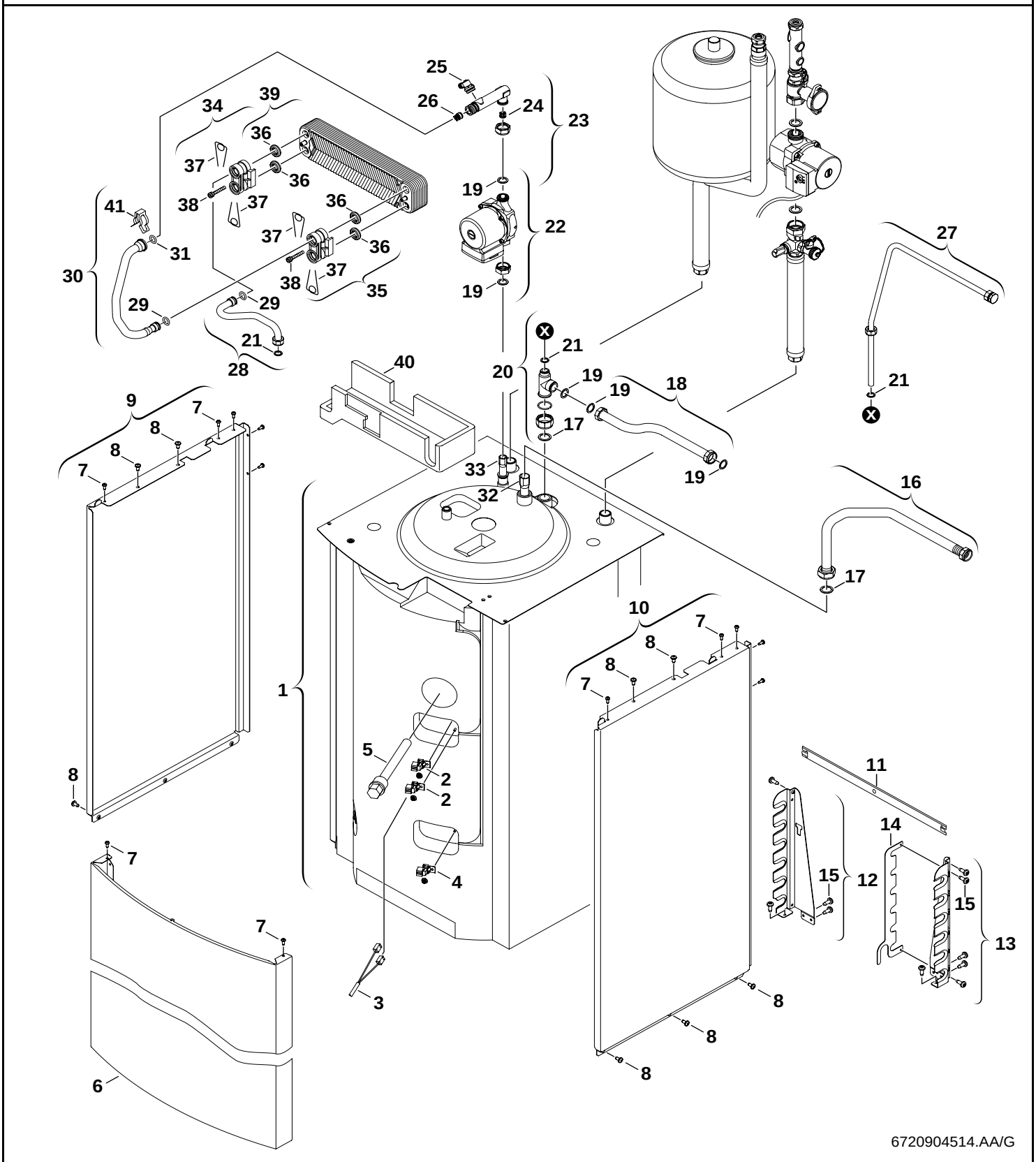


| | |
|---|---|
| **7** **B** Speicherbehälter<br>Storage tank<br>Ballon<br>Bollitore<br>Déposito<br>Voorraadvat | **ZBS16/170S-2solarMA** |

| Pos | Bezeichnung<br>description<br>dénomination<br>descrizioni<br>descripción<br>benaming | S-Nr. | Bestell-Nr.<br>ordering no.<br>n° d'ordine<br>n° d'ordine<br>número el ordenar<br>bestelnummer | PG | Gasart<br>gas type<br>type gaz<br>tipo gas<br>tipo gas<br>gassoorte | ZBS16/170S-2solarMA | | | | | | | | | | | | | | | | | | | Bemerkungen<br>remarks<br>remarques<br>osservazioni<br>observaciones<br>opmerking |
|---|---|---|---|---|---|---|---|---|---|---|---|---|---|---|---|---|---|---|---|---|---|---|---|---|---|
| 1 | Behälter 170 l | | 8 715 407 317 0 | 71 | | ■ | | | | | | | | | | | | | | | | | | | |
| 2 | Temperaturfühler | | 8 714 500 123 0 | 25 | | ■ | | | | | | | | | | | | | | | | | | | |
| 3 | Kabel | | 8 714 402 124 0 | 29 | | ■ | | | | | | | | | | | | | | | | | | | |
| 4 | Temperaturfühler | | 8 713 305 779 0 | 25 | | ■ | | | | | | | | | | | | | | | | | | | |
| 5 | Anode | | 8 718 505 052 0 | 41 | | ■ | | | | | | | | | | | | | | | | | | | |
| 6 | Abdeckung | | 8 718 005 917 0 | 44 | | ■ | | | | | | | | | | | | | | | | | | | |
| 7 | Schraube BZ 4,8x13 (10x) | | 2 910 612 432 0 | 11 | | ■ | | | | | | | | | | | | | | | | | | | |
| 8 | Schraube (10x) | | 2 910 619 454 0 | 16 | | ■ | | | | | | | | | | | | | | | | | | | |
| 9 | Seitenwand links | | 8 718 005 903 0 | 42 | | ■ | | | | | | | | | | | | | | | | | | | |
| 10 | Seitenwand rechts | | 8 718 005 904 0 | 42 | | ■ | | | | | | | | | | | | | | | | | | | |
| 11 | Halter | | 8 718 003 971 0 | 21 | | ■ | | | | | | | | | | | | | | | | | | | |
| 12 | Haltewinkel | | 8 711 304 823 0 | 23 | | ■ | | | | | | | | | | | | | | | | | | | |
| 13 | Haltewinkel | | 8 711 304 824 0 | 23 | | ■ | | | | | | | | | | | | | | | | | | | |
| 14 | Halteblech | | 8 718 005 913 0 | 21 | | ■ | | | | | | | | | | | | | | | | | | | |
| 15 | Schraube BZ 4,8x13 (10x) | | 2 910 612 432 0 | 11 | | ■ | | | | | | | | | | | | | | | | | | | |
| 16 | Anschlussrohr | | 8 710 735 363 0 | 38 | | ■ | | | | | | | | | | | | | | | | | | | |
| 17 | Dichtscheibe 1" (10x) | | 8 710 103 046 0 | 12 | | ■ | | | | | | | | | | | | | | | | | | | |
| 18 | Anschlussrohr | | 8 710 735 344 0 | 28 | | ■ | | | | | | | | | | | | | | | | | | | |
| 19 | Dichtscheibe 3/4" (10x) | | 8 710 103 043 0 | 12 | | ■ | | | | | | | | | | | | | | | | | | | |
| 20 | Anschlussrohr | | 8 713 305 757 0 | 35 | | ■ | | | | | | | | | | | | | | | | | | | |
| 21 | Dichtscheibe 1/2" (10x) | | 8 710 103 045 0 | 11 | | ■ | | | | | | | | | | | | | | | | | | | |
| 22 | Pumpe | | 8 717 204 449 0 | 49 | | ■ | | | | | | | | | | | | | | | | | | | |
| 23 | Verschraubung | | 8 713 305 762 0 | 40 | | ■ | | | | | | | | | | | | | | | | | | | |
| 24 | Drosselbuchse | | 8 713 306 045 0 | 12 | | ■ | | | | | | | | | | | | | | | | | | | |
| 25 | Entlüftungsventil | | 8 717 405 285 0 | 21 | | ■ | | | | | | | | | | | | | | | | | | | |
| 26 | Rückflußverhinderer | | 8 718 505 023 0 | 17 | | ■ | | | | | | | | | | | | | | | | | | | |
| 27 | Anschlussrohr | | 8 710 735 365 0 | 30 | | ■ | | | | | | | | | | | | | | | | | | | |
| 28 | Rohr | | 8 710 735 338 0 | 30 | | ■ | | | | | | | | | | | | | | | | | | | |
| 29 | O-Ring (10x) | | 8 716 771 155 0 | 22 | | ■ | | | | | | | | | | | | | | | | | | | |
| 30 | Rohr | | 8 710 735 339 0 | 35 | | ■ | | | | | | | | | | | | | | | | | | | |
| 31 | O-Ring 17x4 (10x) | | 8 716 771 154 0 | 12 | | ■ | | | | | | | | | | | | | | | | | | | |
| 32 | Einlauf/Auslaufrohr | | 8 710 703 223 0 | 33 | | ■ | | | | | | | | | | | | | | | | | | | |
| 33 | Einlauf/Auslaufrohr | | 8 710 703 226 0 | 33 | | ■ | | | | | | | | | | | | | | | | | | | |
| 34 | Anschlussbuchse | | 8 710 305 385 0 | 16 | | ■ | | | | | | | | | | | | | | | | | | | |
| 35 | Anschlussbuchse | | 8 710 305 387 0 | 16 | | ■ | | | | | | | | | | | | | | | | | | | |
| 36 | Dichtung | | 8 716 106 435 0 | 15 | | ■ | | | | | | | | | | | | | | | | | | | |
| 37 | Haltefeder (10x) | | 8 716 771 169 0 | 12 | | ■ | | | | | | | | | | | | | | | | | | | |
| 38 | Schraube | | 8 716 106 452 0 | 14 | | ■ | | | | | | | | | | | | | | | | | | | |
| 39 | Wärmeübertrager | | 8 716 106 436 0 | 42 | | ■ | | | | | | | | | | | | | | | | | | | |
| 40 | Isolierung | | 8 711 304 828 0 | 16 | | ■ | | | | | | | | | | | | | | | | | | | |
| 41 | Klammer (10x) | | 8 711 200 024 0 | 22 | | ■ | | | | | | | | | | | | | | | | | | | |

**ZBS16/170S-2solarMA**

Speicherbehälter
Storage tank
Ballon
Bollitore
Déposito
Voorraadvat

**7B**

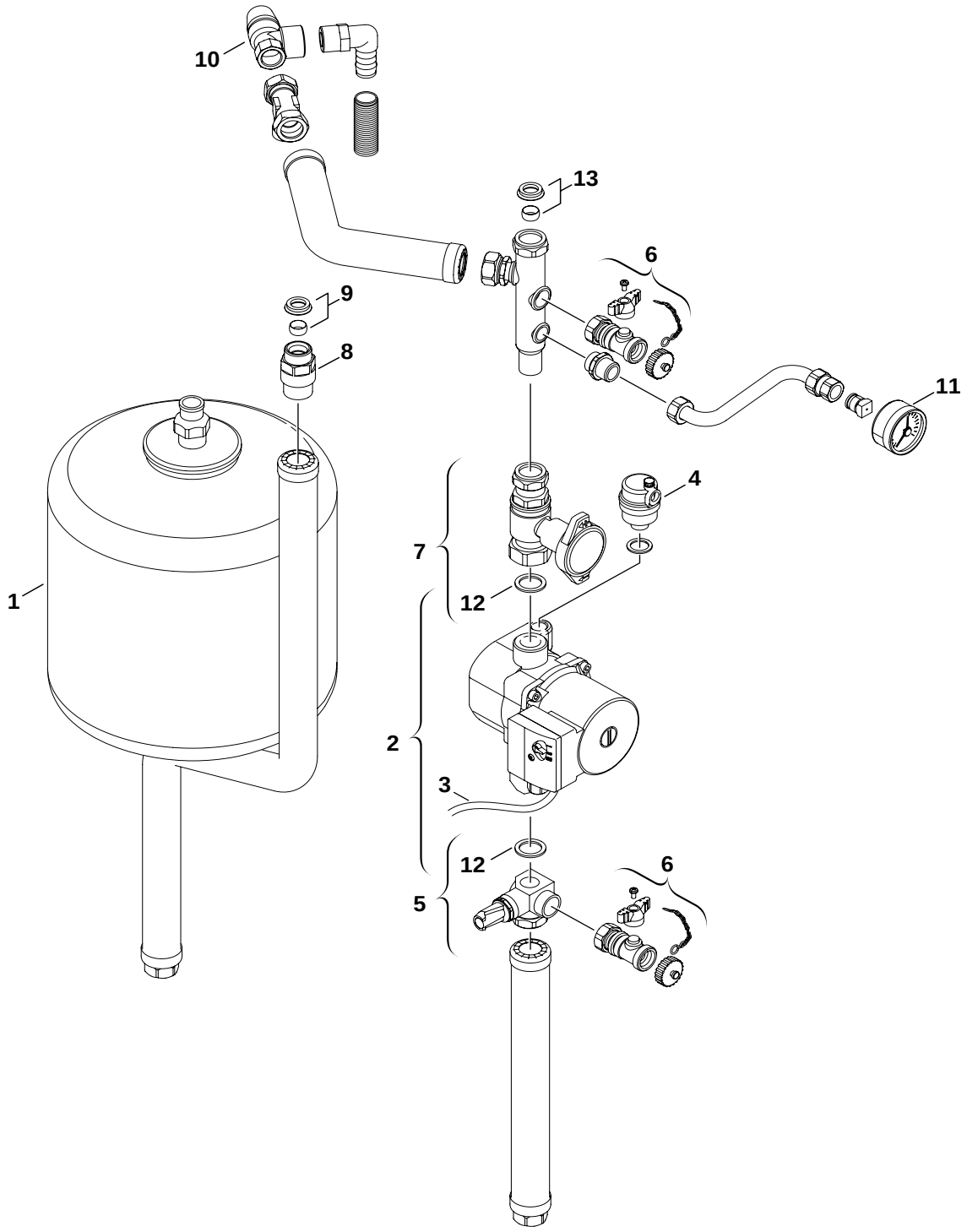


6720904515.AA/G

**8** Solarhydraulik
Solar hydaulics
Hydraulique de solaire
Idraulica solare
Hidráulica solar
Hydrauliek solar

**ZBS16/170S-2solarMA**

| Pos | Bezeichnung<br>description<br>dénomination<br>descrizioni<br>descripción<br>benaming | S-Nr. | Bestell-Nr.<br>ordering no.<br>n° d'ordine<br>n° d'ordine<br>número el ordenar<br>bestelnummer | PG | Gasart<br>gas type<br>type gaz<br>tipo gas<br>tipo gas<br>gassoorte | ZBS16/170S-2solarMA | | | | | | | | | | | | | | | | | | | Bemerkungen<br>remarks<br>remarques<br>osservazioni<br>observaciones<br>opmerking |
|---|---|---|---|---|---|---|---|---|---|---|---|---|---|---|---|---|---|---|---|---|---|---|---|---|---|
| 1 | Solar-Ausdehnungsgefäß SAG 18 | | 7 739 300 100 | | | ■ | | | | | | | | | | | | | | | | | | | |
| 2 | Pumpe | | 8 717 204 527 0 | 49 | | ■ | | | | | | | | | | | | | | | | | | | |
| 3 | Pumpenkabel | | 8 714 402 131 0 | 30 | | ■ | | | | | | | | | | | | | | | | | | | |
| 4 | Schnellentlüfter | | 8 718 505 053 0 | 35 | | ■ | | | | | | | | | | | | | | | | | | | |
| 5 | Durchflussbegrenzer | | 8 713 305 794 0 | 46 | | ■ | | | | | | | | | | | | | | | | | | | |
| 6 | Wartungshahn | | 8 717 405 296 0 | 35 | | ■ | | | | | | | | | | | | | | | | | | | |
| 7 | Kugelhahn | | 8 713 305 795 0 | 42 | | ■ | | | | | | | | | | | | | | | | | | | |
| 8 | Rückflussverhinderer | | 8 713 305 792 0 | 37 | | ■ | | | | | | | | | | | | | | | | | | | |
| 9 | Klemmringverschraubung | | 8 713 305 793 0 | 35 | | ■ | | | | | | | | | | | | | | | | | | | |
| 10 | Sicherheitsventil 6bar | | 8 717 401 025 0 | 34 | | ■ | | | | | | | | | | | | | | | | | | | |
| 11 | Manometer | | 8 717 208 085 0 | 33 | | ■ | | | | | | | | | | | | | | | | | | | |
| 12 | Dichtung | | 8 710 103 212 0 | 13 | | ■ | | | | | | | | | | | | | | | | | | | |
| 13 | Klemmringverschraubung | | 8 713 305 791 0 | 26 | | ■ | | | | | | | | | | | | | | | | | | | |

**ZBS16/170S-2solarMA**

Solarhydraulik
Solar hydaulics
Hydraulique de solaire
Idraulica solare
Hidráulica solar
Hydrauliek solar

**8**

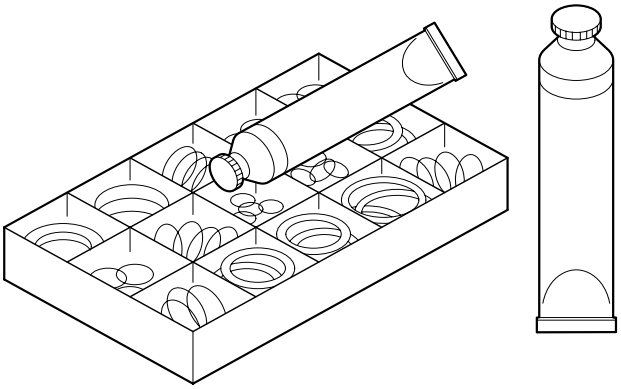

6720904217.AA/G

| Pos | Bezeichnung<br>description<br>dénomination<br>descrizioni<br>descripción<br>benaming | S-Nr. | Bestell-Nr.<br>ordering no.<br>n° d'ordine<br>n° d'ordine<br>número el ordenar<br>bestelnummer | PG | Gasart<br>gas type<br>type gaz<br>tipo gas<br>tipo gas<br>gassoorte | ZBS16/170S-2solarMA | ZBS16/83S-2MA | ZBS16/83S-2MRA | ZBS22/120S-2MA | ZBS22/120S-2MRA | ZBS30/150S-2MA | | | | | | | | | | | | | | Bemerkungen<br>remarks<br>remarques<br>osservazioni<br>observaciones<br>opmerking |
|---|---|---|---|---|---|---|---|---|---|---|---|---|---|---|---|---|---|---|---|---|---|---|---|---|---|
| | Fett HFT1V5 | | 8 709 918 010 0 | 26 | | ■ | ■ | ■ | ■ | ■ | ■ | | | | | | | | | | | | | | |
| | Dichtungsbox | | 8 709 918 412 0 | 32 | | ■ | ■ | ■ | ■ | ■ | ■ | | | | | | | | | | | | | | |
| | Fett Unisilkon L641 | | 8 709 918 413 0 | 30 | | ■ | ■ | ■ | ■ | ■ | ■ | | | | | | | | | | | | | | |
| | Dichtscheibe 3/4" (10x) | | 8 710 103 043 0 | 12 | | ■ | ■ | ■ | ■ | ■ | ■ | | | | | | | | | | | | | | |
| | Dichtscheibe 1/2" (10x) | | 8 710 103 045 0 | 11 | | ■ | ■ | ■ | ■ | ■ | ■ | | | | | | | | | | | | | | |
| | Schelle | | 8 711 301 084 0 | 28 | | ■ | ■ | ■ | ■ | ■ | ■ | | | | | | | | | | | | | | |
| | Doppelnippel 3/4" | | 8 713 305 666 0 | 16 | | ■ | ■ | ■ | ■ | ■ | ■ | | | | | | | | | | | | | | |
| | Doppelnippel 1/2" | | 8 713 305 667 0 | 21 | | ■ | ■ | ■ | ■ | ■ | ■ | | | | | | | | | | | | | | |
| | Wärmeleitpaste | | 8 719 918 658 0 | 28 | | ■ | ■ | ■ | ■ | ■ | ■ | | | | | | | | | | | | | | |
| | O-Ringbox | | 8 719 928 253 0 | 38 | | ■ | ■ | ■ | ■ | ■ | ■ | | | | | | | | | | | | | | |
| | Außentemperaturfühler | | 8 747 207 101 0 | 28 | | | | ■ | | ■ | | | | | | | | | | | | | | | |

**ZBS16/170S-2solarMA**
**ZBS16/83S-2MA ZBS16/83S-2MRA**
**ZBS22/120S-2MA ZBS22/120S-2MRA**
**ZBS30/150S-2MA**

Wartung/Installation
Service/Installation
Service/Installation
Servicio/Installazione
Servicio/Instalación
Service/Installatie

**9**

| Übersetzungsliste<br>List of translations | | Liste des traductions<br>Traduzione delle descrizioni | | Lista de traducciones<br>Vertalinglijst | |
|---|---|---|---|---|---|
| Pos | Description | Denomination | Descrizione | Descripción | Benaming |
| **1** | **Element of construction** | **Groupe de construction** | **Gruppo di construzione** | **Grupo de construccion** | **Montagegroep** |
| 1 | Covering sheet | Couvercle | Coperchio | Chapa de protección | Afdichting |
| 2 | Door | Porte | Panello frontale | Puerta | Deur |
| 3 | Seal-Plate-Combustion Chamber | Joint | Guarnizione | Junta | Pakkingring |
| 4 | Sideshield left | Façade gauche | Penelli laterali sinistra | Chapa cuadro a la izquierda | Zijpaneel links |
| 5 | Sideshield right | Façade droit | Penelli laterali a destra | Chapa cuadro a la derecha | Zijpaneel rechts |
| 6 | Screw tapping no10 x 13 pan head | Vis BZ 4,8x13 (10x) | Vite BZ 4,8x13 (10x) | Tornillo BZ 4,8x13 (10x) | Schroef BZ 4,8x13 (10x) |
| 7 | Wireform spring Set | Epingle | Molla | Clip de fijacion | Borgveer |
| 8 | Expansion vessel 18l | Vase d'expansion 18l | Vaso di espansione 18l | Vaso de expansión 18l | Expansievat 18l |
| 9 | Automatic purger | Purgeur | Valvola sfiato aria | Purgador | Vlotterontluchter |
| 10 | Covering sheet | Couvercle | Coperchio | Chapa de protección | Afdichting |
| 11 | Connector | Raccordement ventouse | Terminale condotto | Acoplamiento salida gas | Rookgasafvoerstuts |
| 12 | Grommet | Bouchon | Coperchietto | Tapon | Doorvoertule |
| 13 | Washer Ø80 | Joint Ø80 | Guarnizione Ø80 | Junta Ø80 | Pakkingring Ø80 |
| 14 | Clip | Collier d.130 | Staffa | Abrazadera | Klembeugel |
| 15 | Flue gas duct | Tuyau d`évacuation gaz | Condotto fumi | Tubo salida de gases | Afvoerpijp |
| 16 | Washer Ø80 | Joint Ø80 | Guarnizione Ø80 | Junta Ø80 | Pakkingring Ø80 |
| 17 | Seal | Joint | Guarnizione | Anillo junta | Pakkingring |
| 18 | Flue pipe seal | Joint | Guarnizione | Anillo junta | Pakkingring |
| 19 | Lock set | Sachet de serrure | Coperchio | Conjunto cerradura | Afsluitingsset |
| 20 | Screw M6x13 phillips steel cross | Vis (10x) | Vite (10x) | Tornillo (10x) | Schroef (10x) |
| **2** | **Element of construction** | **Groupe de construction** | **Gruppo di construzione** | **Grupo de construccion** | **Montagegroep** |
| 1 | Heating block | Echangeur thermique | Blocco lamellare | Bloque de calor | Ketelblok |
| 2 | Nut | Support | Sostegno | Soporte | Stuts |
| 3 | Temperature limit sensor | Limiteur de température | Limitatore temperatura | Limitador de temperatura | Temperatuurbegrenzer |
| 4 | Cover | Couvercle | Coperchio | Tapa | Deksel |
| 5 | Sealing | Joint | Guarnizione | Junta | Afdichting |
| 6 | Shield | Tôle de protection | Lamierino | Chapa protectora | Afschermplaat |
| 7 | Set of electrodes | Jeu d´électrodes | Set di elettrodi | Conjunto electrodo | Elektrodenset |
| 8 | Temperature sensor | Sonde de temperature | Sensore termometrico | Sensor de temperatura | Temperatuurvoeler |
| 9 | Burner | Brûleur | Bruciatore | Quemador | Brander |
| 10 | Burner sealing | Joint de brûleur | Guarnizione bruciatore | Junta de quemador | Brander afdichting |
| 11 | Fixing bolt | Joint de fixation | Set di fissaggio | Juego piezas de fijacion | Bevestigingsset |
| 12 | Cover | Couvercle | Coperchio | Tapa | Deksel |
| 13 | Fixing set | Joint de fixation | Set di fissaggio | Juego piezas de fijacion | Bevestigingsset |
| 14 | Fixing set | Joint de fixation | Set di fissaggio | Juego piezas de fijacion | Bevestigingsset |
| 15 | Clip | Rondelle (10x) | Rondella (10x) | Arandela (10x) | Onderlegring (10x) |
| 16 | Washer | Joint (10x) | Guarnizione (10x) | Junta (10x) | Afdichting (10x) |
| 17 | Flue gas collector | Coupe tirage antirefouleur | Cappa fumi | Seguro evacuación de gases | Valwindafleider |
| **4** | **Element of construction** | **Groupe de construction** | **Gruppo di construzione** | **Grupo de construccion** | **Montagegroep** |
| 1 | Fan assembly | Ventilateur | Ventilatore | Ventilador | Ventilador |
| 2 | Washer | Joint | Guarnizione | Anillo junta | Pakkingring |
| 3 | Mixer | Chambre de melange | Modulo di miscelazio | Máquina de mezcla | Meng inrichting |
| 4 | Air limiter | Chambre de melange | Modulo di miscelazio | Máquina de mezcla | Meng inrichting |
| 5 | Pipe - gas | Tube gaz | Tubo gas | Tubo de gas | Gaspijp |
| 6 | Lead seal | Plomb (10x) | Piombino (10x) | Plomo precinto (10x) | Loodje (10x) |
| 7 | O-ring | O-ring (10x) | Anello tenuta (10x) | Anillo tórico (10x) | O-ring (10x) |
| 8 | Unit Union | Ecrou | Dado | Tuerca | Wartelmoer |
| 9 | Protective cap | Capot de protection (10x) | Sigillo (10x) | Capuchón protector (10x) | Beschermkap (10x) |
| 10 | Washer | Joint | Guarnizione | Junta | Pakkingring |
| 11 | Gas valve ce427 | Bloc gaz CE427 | Gruppo gas CE427 | Cuerpo de gas CE427 | Gasregelblok CE427 |
| 12 | Protective cap | Capot de protection (10x) | Sigillo (10x) | Capuchón protector (10x) | Beschermkap (10x) |
| 13 | Lead seal | Plomb | Piombino (10x) | Plomo precinto (10x) | Loodje (10x) |
| 14 | Gas supply pipe | Tube arrivée gaz | Tubo gas | Tubo de entrada de gas | Gastoevoerpijp |
| 15 | Throttle bush (38) | Coussinet limiteur (38) | Buccola di strozzagio (38) | Válvula di laminazione (38) | Regelventiel geel (38) |
| 16 | O-ring | Joint torique (10x) | Anello tenuta (10x) | Anillo tórico (10x) | O-ring (10x) |
| 17 | Fibre washer 23.9 X 17.2 X 1.5 | Joint 3/4" (10x) | Guarnizione 3/4" (10x) | Junta 3/4" (10x) | Afdichting 3/4" (10x) |

| Übersetzungsliste<br>List of translations | | Liste des traductions<br>Traduzione delle descrizioni | | Lista de traducciones<br>Vertalinglijst | |
|---|---|---|---|---|---|
| Pos | Description | Denomination | Descrizione | Descripción | Benaming |
| 18 | Fibre washer 18.6 X 13.5 X 1.5 (10x) | Joint 1/2" (10x) | Guarnizione 1/2" (10x) | Junta 1/2" (10x) | Afdichting 1/2" (10x) |
| 19 | bearing plate | Membrane | Piatello | Platillo de membrana | Overdrachtplaat met stift |
| | Gas conversion set | Kit de transformation de gaz | Kit conversione gas | Kit de conversión de gas | Gasombouwset |
| **5** | **Element of construction** | **Groupe de construction** | **Gruppo di construzione** | **Grupo de construccion** | **Montagegroep** |
| 1 | Pipe | Tube | Tubo | Tubo | Pijp |
| 2 | Washer 1" (10x) | Joint 1" (10x) | Guarnizione 1" (10x) | Junta 1" (10x) | Afdichting 1" (10x) |
| 3 | Fibre washer 23.9 X 17.2 X 1.5 | Joint 3/4" (10x) | Guarnizione 3/4" (10x) | Junta 3/4" (10x) | Afdichting 3/4" (10x) |
| 4 | O-ring 13,87x3,53 (10x) | O-ring 13,87x3,53 (10x) | Anello tenuta 13,87x3,53 (10x) | Anillo tórico 13,87x3,53 (10x) | O-ring 13,87x3,53 (10x) |
| 6 | Pipe - venting | Tube de dégazage | Separatore | Conducto de purga | Ontluchtingspijp |
| 7 | Fibre washer 18.6 X 13.5 X 1.5 (10x) | Joint 1/2" (10x) | Guarnizione 1/2" (10x) | Junta 1/2" (10x) | Afdichting 1/2" (10x) |
| 8 | Pipe | Tube | Tubo | Tubo | Pijp |
| 10 | Flow pipe | Tuyauterie | Tubo di raccordo | Tubo agua | Aansluitpijp |
| 11 | Pipe | Tube | Tubo | Tubo | Pijp |
| 12 | O-ring 13,87x3,53 (10x) | O-ring 13,87x3,53 (10x) | Anello tenuta 13,87x3,53 (10x) | Anillo tórico 13,87x3,53 (10x) | O-ring 13,87x3,53 (10x) |
| 13 | Flow pipe | Tuyauterie | Tubo di raccordo | Tubo agua | Aansluitpijp |
| 14 | Return pipe | Tube de raccordement retour chauffage | Tubazione di ritorno | Tubo di retorno | Retourleiding |
| 15 | O-ring | O-ring (10x) | Anello tenuta (10x) | Anillo tórico (10x) | O-ring (10x) |
| 16 | Wireform spring | Epingle (10x) | Molla (10x) | Clip de fijacion (10x) | Borgveer (10x) |
| 17 | Wireform spring (10x) | Epingle (10x) | Molla (10x) | Clip de fijacion (10x) | Borgveer (10x) |
| 18 | Pump | Circulateur | Pompa | Bomba | Pomp |
| 19 | Cable | Faisceau circulateur | Cabliaggo de pompa | Cable de bomba | Pompkabel |
| 20 | Manometer | Manomètre | Manometro | Manómetro | Manometer |
| 21 | O-ring | O-ring (10x) | Anello tenuta (10x) | Anillo tórico (10x) | O-ring (10x) |
| 22 | Wireform spring | Epingle (10x) | Molla (10x) | Clip de fijacion (10x) | Borgveer (10x) |
| 23 | 3-way valve | Vanne 3 voies | 3-vie valvola | 3-vías válvula | 3-wegklep |
| 24 | Safety relief valve 3bar | Soupape de sécurité 3bar | Valvola sicurezza 3bar | Válvula de sobrepresión 3bar | Veiligheidsklep 3bar |
| 25 | Adapter | Raccord | Adattore | Adaptador | Adapter |
| 26 | Washer | Joint (10x) | Guarnizione (10x) | Junta (10x) | Afdichting (10x) |
| 27 | O-ring | O-ring (10x) | Anello tenuta (10x) | Anillo tórico (10x) | O-ring (10x) |
| 28 | Wireform spring | Epingle (10x) | Molla (10x) | Clip de fijacion (10x) | Borgveer (10x) |
| 29 | Motor | Servomoteur | Motore | Motor | Motor |
| 30 | Hose | Flexible | Tubo flessibile | Tubo flexible | Slang |
| 31 | Siphon | Siphon | Sifone | Sifón | Sifon |
| 32 | Protective cap | Capot de protection | Sigillo | Capuchón protector | Beschermkap |
| 33 | Cover | Couvercle | Coperchio nero | Tapa | Deksel |
| 34 | Corrugated pipe | Tuyau flexible | Tubo ondulato | Tubo ondolano | Flexibele leiding |
| 35 | O-ring | Joint torique | Set di anello tenuta | Conjunto de anillo tórico | O-ring |
| 36 | Clamping spring | Ressort (10x) | Molla (10x) | Clip de fijación (10x) | Klemveer (10x) |
| **6** | **Element of construction** | **Groupe de construction** | **Gruppo di construzione** | **Grupo de construccion** | **Montagegroep** |
| 1 | Control unit | Tableau électrique | Cassetta ionizzazione | Aparato de mando | Besturingsautomaat |
| 2 | Printed circuit | Circuit imprimé | Scheda elettronica | Placa de circuito impreso | Print |
| 3 | Spacer | Entretoise (10x) | Distanziale (10x) | Collar distanziador (10x) | Afstandhouder (10x) |
| 4 | Set of plugs | Plots connexion | Morsetto | Conjunto de anection | Stekker set |
| 5 | Fusing element T2,5A | Fusible T2,5A (10x) | Fusibile T2,5A (10x) | Fusible T2,5A (10x) | Buissmeltveiligheid T2,5A (10x) |
| 6 | Fusing element T0,5A | Fusible T0,5A (10x) | Fusibile T0,5A (10x) | Fusible T0,5A (10x) | Buissmeltveiligheid T0,5A (10x) |
| 7 | Fusing element T1,6A | Fusible T1,6A (10x) | Fusibile T1,6A (10x) | Fusible T1,6A (10x) | Buissmeltveiligheid T1,6A (10x) |
| 8 | Transformer | Transformateur | Trasformatore primario | Transformadores | Transformator |
| 9 | Screw M4x16 steel phillips pan hd | Vis (10x) | Vite (10x) | Tornillo (10x) | Schroef (10x) |
| 10 | Set of cables | Faisceau | Cablaggio | Conjunto cables | Kabel set |
| 11 | Ignition lead | Faisceau d'electrodes | Cavetto accensione | Conductor de alta tensión | Hoogspanningsleiding |
| 12 | Pump cable | Faisceau circulateur | Cabliaggo de pompa | Cable de bomba | Pompkabel |
| 13 | Casing light grey | Carter gris clair | Involucro grigio chiaro | Protector girar claro | Bescherm lichtgrijs |
| 14 | Rotary handles light grey | Croisillons gris clairF | Manopola grigio chiaro | Grifo de girar claro | Schakelknop lichtgrijs |
| 17 | TA211E/C1 | TA211E/C1 | TA211E/C1 | TA211E/C1 | TA211E/C1 |
| 18 | GREENSTAR DIGITAL TIMER | GREENSTAR DIGITAL TIMER | DT 2(GRIGIO CHIARO) | DT2 "HELLGRAU" | |
| 19 | Shield light grey | Sachet caches gris clair | Mascherina grigio chiaro | Chapa cuadro girar claro | Paneel lichtgrijs |
| 20 | Code plug (12) | CI de codage (12) | Spina codifica (12) | Conector codificador (12) | Codeer stekker (12) |

| Übersetzungsliste<br>List of translations | | Liste des traductions<br>Traduzione delle descrizioni | | Lista de traducciones<br>Vertalinglijst | |
|---|---|---|---|---|---|
| Pos | Description | Denomination | Descrizione | Descripción | Benaming |
| 21 | Observation window | Hublot | Vetrinoo | Cristal de observación | Kijkglas |
| 22 | Shield | Cache | Mascherina | Chapa cuadro | Paneel |
| 23 | Shield | Cache | Mascherina | Chapa cuadro | Paneel |
| 24 | Controller | Régulateur | Regolator | Controlador | Regelaar |
| 25 | Covering sheet | Couvercle | Coperchio | Chapa de protección | Afdichting |
| | Fusing element set T0,5/t1,6/t2,5/t3,15A | Sachet fusibles T0,5/T1,6/T2,5/T3,15A | Set di fusibili T0,5/T1,6/T2,5/T3,15A | Conjunto de fusibleT0,5/T1,6/T2,5/T3,15A | Zekeringset T0,5/T1,6/T2,5/T3,15A |
| **7A** | **Element of construction** | **Groupe de construction** | **Gruppo di construzione** | **Grupo de construccion** | **Montagegroep** |
| 1 | Reservoir 83 L | Ballon de stockage 83 L | Sostegno 83 L | Déposito 83 L | Reservoir 83 L |
| 2 | Anode | Anode | Anodo | Anodo | Anode |
| 3 | Temperature sensor | Sonde de temperature | Sensore termometrico | Sensor de temperatura | Temperatuurvoeler |
| 4 | KFE-HAHN ZUB.NR845 | Robinet de vidange/remplissage ECS | | | |
| 5 | Inlet/Outlet tube | Tube d´arrivée/évacuation | Tubo della presa/ entrada | Pipa del producto/de salida | Inlet/Outlet tube |
| 6 | Covering sheet | Couvercle | Coperchio | Chapa de protección | Afdichting |
| 7 | Screw tapping no10 x 13 pan head | Vis BZ 4,8x13 (10x) | Vite BZ 4,8x13 (10x) | Tornillo BZ 4,8x13 (10x) | Schroef BZ 4,8x13 (10x) |
| 8 | Side panel left | Côté gauche | Panello laterale sinistra | Pared lateral a la izquierda | Zijpaneel links |
| 9 | Side panel right | Côté droit | Panello laterale a destra | Pared lateral a la derecha | Zijpaneel rechts |
| 10 | Screw M6x13 phillips steel cross | Vis (10x) | Vite (10x) | Tornillo (10x) | Schroef (10x) |
| 11 | Pipe | Tube | Tubo | Tubo | Pijp |
| 12 | O-ring 17x4 (10x) | O-ring 17x4 (10x) | Anello tenuta 17x4 (10x) | Anillo tórico 17x4 (10x) | O-ring 17x4 (10x) |
| 13 | O-ring 13,87x3,53 (10x) | O-ring 13,87x3,53 (10x) | Anello tenuta 13,87x3,53 (10x) | Anillo tórico 13,87x3,53 (10x) | O-ring 13,87x3,53 (10x) |
| 14 | Pipe | Tube | Tubo | Tubo | Pijp |
| 15 | Fibre washer 18.6 X 13.5 X 1.5 (10x) | Joint 1/2" (10x) | Guarnizione 1/2" (10x) | Junta 1/2" (10x) | Afdichting 1/2" (10x) |
| 16 | Heat exchanger | Corps de chauffe | Blocco lamellare | Bloque de calor | Ketelblok |
| 17 | Seal plate heat exchanger | Joint d`étanchétité | Gomma di tenuta | Junta de goma | Afdichtingsrubber |
| 18 | Connection bush | Douille filetée | Piattello di collegamento | Casquillo roscado | Aansluitstuk (bus) |
| 19 | Connection bush | Douille filetée | Piattello di collegamento | Casquillo roscado | Aansluitstuk (bus) |
| 20 | Connection union | Raccord sonde sanitaire | Raccordo | Conexión | Koppeling |
| 21 | Throttle bush | Coussinet limiteur | Buccola di strozzagio | Limitador de flujo | Regelventiel |
| 22 | Fibre washer 23.9 X 17.2 X 1.5 | Joint 3/4" (10x) | Guarnizione 3/4" (10x) | Junta 3/4" (10x) | Afdichting 3/4" (10x) |
| 23 | Vent valve | Dégazeur | Valvola di scarico | Válvula de purga de aire | Ontluchtventiel |
| 24 | Swing check valve | Clapet anti-retour | Ritorno di blocco | Valvula de retención | Terugslagventiel |
| 25 | Pump | Circulateur | Pompa | Bomba | Pomp |
| 26 | Flow pipe | Tuyauterie | Tubo di raccordo | Tubo agua | Aansluitpijp |
| 27 | Flow pipe | Tuyauterie | Tubo di raccordo | Tubo agua | Aansluitpijp |
| 28 | Washer 1" (10x) | Joint 1" (10x) | Guarnizione 1" (10x) | Junta 1" (10x) | Afdichting 1" (10x) |
| 29 | Screw & washer assembly m5 | Joint de fixation | Set di fissaggio | Juego piezas de fijacion | Bevestigingsset |
| 30 | Clamping spring | Ressort (10x) | Molla (10x) | Clip de fijación (10x) | Klemveer (10x) |
| 31 | Fixing bracket | Support | Angolare | Angulo soporte | Steunbeugel |
| 32 | Fixing bracket | Tôle de fixation | Angolare | Angulo soporte | Steunhoek |
| 33 | Fixing bracket | Tôle de fixation | Angolare | Angulo soporte | Steunhoek |
| 34 | Screw tapping no10 x 13 pan head | Vis BZ 4,8x13 (10x) | Vite BZ 4,8x13 (10x) | Tornillo BZ 4,8x13 (10x) | Schroef BZ 4,8x13 (10x) |
| 35 | Flow pipe | Tuyauterie | Tubo di raccordo | Tubo agua | Aansluitpijp |
| 36 | Flow pipe | Tuyauterie | Tubo di raccordo | Tubo agua | Pijp |
| 37 | Flow pipe | Tuyauterie | Tubo di raccordo | Tubo agua | Aansluitpijp |
| 38 | Insulation | Isolation | Isolamento | Aislamiento | Isolatie |
| 39 | Cable | Faisceau | Cablaggio | Cable | Kabel |
| 40 | Connection plate | Plaque de jonction | Lamierino | Placa de unión | Vangschaal |
| 41 | Clip (10x) | Clip (10x) | Graffa (10x) | Grapa (10x) | Klem (10x) |
| **7B** | **Element of construction** | **Groupe de construction** | **Gruppo di construzione** | **Grupo de construccion** | **Montagegroep** |
| 1 | Reservoir 170 l | Ballon de stockage 170 l | Sostegno 170 l | Déposito 170 l | Reservoir 170 l |
| 2 | Temperature sensor | Sonde de temperature | Sensore termometrico | Sensor de temperatura | Temperatuurvoeler |
| 3 | Cable | Faisceau | Cablaggio | Cable | Kabel |
| 4 | Temperature sensor | Sonde de temperature | Sensore termometrico | Sensor de temperatura | Temperatuurvoeler |
| 5 | Anode | Anode | Anodo | Anodo | Anode |
| 6 | Covering sheet | Couvercle | Coperchio | Chapa de protección | Afdichting |
| 7 | Screw tapping no10 x 13 pan head | Vis BZ 4,8x13 (10x) | Vite BZ 4,8x13 (10x) | Tornillo BZ 4,8x13 (10x) | Schroef BZ 4,8x13 (10x) |
| 8 | Screw M6x13 phillips steel cross | Vis (10x) | Vite (10x) | Tornillo (10x) | Schroef (10x) |

| Übersetzungsliste<br>List of translations | | Liste des traductions<br>Traduzione delle descrizioni | | Lista de traducciones<br>Vertalinglijst | |
|---|---|---|---|---|---|
| Pos | Description | Denomination | Descrizione | Descripción | Benaming |
| 9 | Side panel left | Côté gauche | Panello laterale sinistra | Pared lateral a la izquierda | Zijpaneel links |
| 10 | Side panel right | Côté droit | Panello laterale a destra | Pared lateral a la derecha | Zijpaneel rechts |
| 11 | Fixing bracket | Support | Angolare | Angulo soporte | Steunbeugel |
| 12 | Fixing bracket | Tôle de fixation | Angolare | Angulo soporte | Steunhoek |
| 13 | Fixing bracket | Tôle de fixation | Angolare | Angulo soporte | Steunhoek |
| 14 | Connection plate | Plaque de jonction | Lamierino | Placa de unión | Vangschaal |
| 15 | Screw tapping no10 x 13 pan head | Vis BZ 4,8x13 (10x) | Vite BZ 4,8x13 (10x) | Tornillo BZ 4,8x13 (10x) | Schroef BZ 4,8x13 (10x) |
| 16 | Flow pipe | Tuyauterie | Tubo di raccordo | Tubo agua | Aansluitpijp |
| 17 | Washer 1" (10x) | Joint 1" (10x) | Guarnizione 1" (10x) | Junta 1" (10x) | Afdichting 1" (10x) |
| 18 | Flow pipe | Tuyauterie | Tubo di raccordo | Tubo agua | Aansluitpijp |
| 19 | Fibre washer 23.9 X 17.2 X 1.5 | Joint 3/4" (10x) | Guarnizione 3/4" (10x) | Junta 3/4" (10x) | Afdichting 3/4" (10x) |
| 20 | Flow pipe | Tuyauterie | Tubo di raccordo | Tubo agua | Pijp |
| 21 | Fibre washer 18.6 X 13.5 X 1.5 (10x) | Joint 1/2" (10x) | Guarnizione 1/2" (10x) | Junta 1/2" (10x) | Afdichting 1/2" (10x) |
| 22 | Pump | Circulateur | Pompa | Bomba | Pomp |
| 23 | Connection union | Raccord sonde sanitaire | Raccordo | Conexión | Koppeling |
| 24 | Throttle bush | Coussinet limiteur | Buccola di strozzagio | Limitador de flujo | Regelventiel |
| 25 | Vent valve | Dégazeur | Valvola di scarico | Válvula de purga de aire | Ontluchtventiel |
| 26 | Swing check valve | Clapet anti-retour | Ritorno di blocco | Valvula de retención | Terugslagventiel |
| 27 | Flow pipe | Tuyauterie | Tubo di raccordo | Tubo agua | Aansluitpijp |
| 28 | Pipe | Tube | Tubo | Tubo | Pijp |
| 29 | O-ring 13,87x3,53 (10x) | O-ring 13,87x3,53 (10x) | Anello tenuta 13,87x3,53 (10x) | Anillo tórico 13,87x3,53 (10x) | O-ring 13,87x3,53 (10x) |
| 30 | Pipe | Tube | Tubo | Tubo | Pijp |
| 31 | O-ring 17x4 (10x) | O-ring 17x4 (10x) | Anello tenuta 17x4 (10x) | Anillo tórico 17x4 (10x) | O-ring 17x4 (10x) |
| 32 | Inlet/Outlet tube | Tube d´arrivée/évacuation | Tubo della presa/ entrada | Pipa del producto/de salida | Inlet/Outlet tube |
| 33 | Inlet/Outlet tube | Tube d´arrivée/évacuation | Tubo della presa/ entrada | Pipa del producto/de salida | Inlet/Outlet tube |
| 34 | Connection bush | Douille filetée | Piattello di collegamento | Casquillo roscado | Aansluitstuk (bus) |
| 35 | Connection bush | Douille filetée | Piattello di collegamento | Casquillo roscado | Aansluitstuk (bus) |
| 36 | Seal plate heat exchanger | Joint d`étanchétité | Gomma di tenuta | Junta de goma | Afdichtingsrubber |
| 37 | Clamping spring | Ressort (10x) | Molla (10x) | Clip de fijación (10x) | Klemveer (10x) |
| 38 | Screw & washer assembly m5 | Joint de fixation | Set di fissaggio | Juego piezas de fijacion | Bevestigingsset |
| 39 | Heat exchanger | Corps de chauffe | Blocco lamellare | Bloque de calor | Ketelblok |
| 40 | Insulation | Isolation | Isolamento | Aislamiento | Isolatie |
| 41 | Clip (10x) | Clip (10x) | Graffa (10x) | Grapa (10x) | Klem (10x) |
| **8** | **Element of construction** | **Groupe de construction** | **Gruppo di construzione** | **Grupo de construccion** | **Montagegroep** |
| 1 | Solar-Expansion vessel SAG 18 | VASE D'EXPANSION SAG 18 | | | |
| 2 | Pump | Circulateur | Pompa | Bomba | Pomp |
| 3 | Pump cable | Faisceau circulateur | Cabliaggo de pompa | Cable de bomba | Pompkabel |
| 4 | Automatic purger | Purgeur | Valvola sfiato aria | Purgador | Vlotterontluchter |
| 5 | Flow limiter | Limiteur de débit | Regolatore di flusso | Obturador | Debietbegrenzer |
| 6 | Service cock | Vanne d'arrêt chauffage | Llave de mantenimiento | Llave de manutenzione | Kraan onderhoud |
| 7 | Ball valve | Robinet à boule | Valvola a sfera | Válvula de bola | Kogelkraan |
| 8 | Swing check valve | Clapet anti-retour | Ritorno di blocco | Valvula de retención | Terugslagventiel |
| 9 | Squeeze-type union | Joint américan | Anello | Racor | Klemringkoppelstuk |
| 10 | Safety relief valve 6bar | Soupape de sécurité 6bar | Valvola sicurezza 6bar | Válvula de sobrepresión 6bar | Veiligheidsklep 6bar |
| 11 | Manometer | Manomètre | Manometro | Manómetro | Manometer |
| 12 | Washer | Joint | Guarnizione | Junta | Afdichting |
| 13 | Squeeze-type union | Joint américan | Anello | Racor | Klemringkoppelstuk |
| **9** | **Element of construction** | **Groupe de construction** | **Gruppo di construzione** | **Grupo de construccion** | **Montagegroep** |
| | Grease HFT1V5 | Graisse HFT1V5 | Grasso HFT1V5 | Grasa HFT1V5 | Vet HFT1V5 |
| | Set of washers | Sachet de joints | Set di guarnizioni | Conjunto de juntas | Set pakkingen |
| | Grease Unisilkon L641 | Graisse Unisilkon L641 | Grasso Unisilkon L641 | Grasa Unisilkon L641 | Vet Unisilkon L641 |
| | Fibre washer 23.9 X 17.2 X 1.5 | Joint 3/4" (10x) | Guarnizione 3/4" (10x) | Junta 3/4" (10x) | Afdichting 3/4" (10x) |
| | Fibre washer 18.6 X 13.5 X 1.5 (10x) | Joint 1/2" (10x) | Guarnizione 1/2" (10x) | Junta 1/2" (10x) | Afdichting 1/2" (10x) |
| | Clip | Collier d.130 | Staffa | Abrazadera | Klembeugel |
| | Barrel nipple | Raccord | Nipples doppio | Manguito rsocado doble | Dubbel nippel |
| | Thermal conduction compu | Matière thermocondutrice | Materia termoconduttrice | Pasta termoconductora | Warmtegeleidingspasta |
| Pos | Description | Denomination | Descrizione | Descripción | Benaming |

**Übersetzungsliste**
**List of translations**

**Liste des traductions**
**Traduzione delle descrizioni**

**Lista de traducciones**
**Vertalinglijst**

| | | | | | |
|---|---|---|---|---|---|
| | SET OF O-RINGS | O-RING | Anello tenuta | Anillo tórico | O-ring box |
| | Outside temperature sensor | Sonde de température extérieure | Sonda esterna | Sensor de temperatura exterior | Buitentemperatuurvoeler |

| Gerätetypen<br>Types of appliances | Types de chaudieres<br>Tipo apparecchi | | Tipos de aplicaciones<br>Toesteltypes |
|---|---|---|---|
| Gerat<br>Appliance<br>Chaudiere<br>Apparecchio<br>Aparato<br>Toestel | Bestell-Nr.<br>ordering no.<br>numero de commande<br>n° d'ordine<br>número el ordenar<br>bestelnummer | Land<br>Country<br>Pay<br>Paese<br>Paese<br>Land | Bemerkungen<br>remarks<br>remarques<br>osservazioni<br>observaciones<br>opmerkingen |
| | | | |
| **ZBS16/170S-2SOLARMA21** | 7 714 301 004 | Deutschland | |
| **ZBS16/170S-2SOLARMA23** | 7 714 311 004 | Deutschland | |
| **ZBS16/83S-2MA21** | 7 714 301 001 | Deutschland | |
| **ZBS16/83S-2MA23** | 7 714 311 001 | Deutschland | |
| **ZBS16/83S-2MRA21** | 7 714 301 000 | Deutschland | |
| **ZBS16/83S-2MRA23** | 7 714 311 000 | Deutschland | |
| **ZBS16/83S-2MRA31** | 7 714 321 000 | Deutschland | |
| **ZBS22/120S-2MA21** | 7 714 301 005 | Deutschland | |
| **ZBS22/120S-2MA23** | 7 714 311 005 | Deutschland | |
| **ZBS22/120S-2MRA21** | 7 714 301 002 | Deutschland | |
| **ZBS22/120S-2MRA23** | 7 714 311 002 | Deutschland | |
| **ZBS22/120S-2MRA31** | 7 714 321 002 | Deutschland | |
| **ZBS30/150S-2MA21** | 7 714 301 003 | Deutschland | |
| **ZBS30/150S-2MA23** | 7 714 311 003 | Deutschland | |
| | | | |
| **ZBS30/150S-2MA23 S7400** | 7 714 311 019 | Kroatien | |
| | | | |
| **ZBS22/120S-2MA23 S6100** | 7 714 311 012 | Lettland | |
| **ZBS30/150S-2MA23 S6100** | 7 714 311 013 | Lettland | |
| | | | |
| **ZBS16/83S-2MA23 S5300** | 7 714 311 014 | Polen | |
| **ZBS22/120S-2MA23 S5300** | 7 714 311 015 | Polen | |
| **ZBS30/150S-2MA23 S5300** | 7 714 311 016 | Polen | |
| | | | |
| **ZBS30/150S-2MA23 S6000** | 7 714 311 017 | Serbien | |
| | | | |
| **ZBS22/120S-2MA23 S7200** | 7 714 311 018 | Slovenien | |
| | | | |
| **ZBS16/83S-2MA23 S5200** | 7 714 311 009 | Tschechien | |
| **ZBS22/120S-2MA23 S5200** | 7 714 311 010 | Tschechien | |
| **ZBS30/150S-2MA23 S5200** | 7 714 311 011 | Tschechien | |
| | | | |
| **ZBS30/150S-2MA23 S7100** | 7 714 311 020 | Ukraine | |
| | | | |

| Gerätetypen<br>Types of appliances | Types de chaudieres<br>Tipo apparecchi | | Tipos de aplicaciones<br>Toesteltypes |
|---|---|---|---|
| Gerat<br>Appliance<br>Chaudiere<br>Apparecchio<br>Aparato<br>Toestel | Bestell-Nr.<br>ordering no.<br>numero de commande<br>n° d'ordine<br>número el ordenar<br>bestelnummer | Land<br>Country<br>Pay<br>Paese<br>Paese<br>Land | Bemerkungen<br>remarks<br>remarques<br>osservazioni<br>observaciones<br>opmerkingen |
| | | | |
| **ZBS16/83S-2MA23 S5000** | 7 714 311 006 | Ungarn | |
| **ZBS22/120S-2MA23 S5000** | 7 714 311 007 | Ungarn | |
| **ZBS30/150S-2MA23 S5000** | 7 714 311 008 | Ungarn | |

BOSCH

BBT Thermotechnik GmbH
Postfach 1309
D-73243 Wernau

www.bbt-thermotechnik.de