BOSCH
Invented for life

Steam boiler systems from Bosch

www.bosch-industrial.com

Highly efficient and reliable process heat

Contents

3 Quality through 150 years of experience

6 Energy-saving system technology

8 Electric steam boiler ELSB

12 UNIVERSAL steam boiler CSB

16 UNIVERSAL steam boiler U-MB

20 UNIVERSAL steam boiler UL-S/UL-SX

24 UNIVERSAL steam boiler ZFR/ZFR-X

28 Superheater module

29 Reference power plant Ledvice

30 Four-pass boiler with burner

32 UNIVERSAL heat recovery steam boiler HRSB

34 Boiler control BCO and compact steam control CSC

35 Digital efficiency assistant MEC Optimize

36 Remote access MEC Remote

37 Bosch Industrial Service

38 Reference Beck+Heun

39 Reference Haribo

Hot water boilers
Heating boilers

	UT-L	UT-M	UT-H	UT-HZ
Output MW	0.6–25	0.7–19	0.8–18	13–38
Temperature max. °C	110	190	225	225
Pressure max. bar	16	16	30	30

Steam boilers

	ELSB	U-MB	CSB		UL-S(X)	ZFR(X)
Output t/h	0.35–7.5	0.2–2	0.3–4.8	0.3–5.2	1.2–28	18–55
Temperature max. °C	224	204	110	204	300	300
Pressure max. bar	24	16	0,5	16	30	30

Efficiency

Heat recovery boiler HRSB	4-pass boiler with burner	3-pass boiler without burner	Recovery and use
Heat recovery steam boiler	Heat recovery boiler steam/hot water		Waste heat

Components

Boiler/system control	Water	Steam/Condensate	Fuel supply
Control cabinet	Modules	Modules	Burner systems

Quality through 150 years of experience

Bosch Industriekessel is renowned worldwide as a specialist supplier of boiler systems in all sizes and output categories. For over 150 years we have been providing innovation in industrial boiler construction.

The company, which began in 1865 as a small boiler maker under the Loos family name, has developed in recent decades into a leading global system supplier for industrial boilers. More than 120,000 boiler systems supplied to over 140 countries worldwide confirm the renowned quality, reliability and efficiency of our industrial boilers, which are manufactured in Gunzenhausen (Germany) and Bischofshofen (Austria).

Efficient systems
Our modular boiler systems can significantly reduce operating costs compared to conventional boilers. In addition to minimising fuel consumption, our boiler systems also reduce the consumption of water, chemicals and electric power as well as the work involved in operation and supervision.

Perfectly controlled
Thanks to the intelligent Bosch control systems, the availability and also the efficiency of the boiler plants increase. Smart control features, such as for example for cold starts or for multi-boiler systems, significantly extend the service life of the boiler systems.

Competence in every phase

Whether it is 3D data, technical drawings or documents for tendering and approval, the experts from Bosch offer specialist support at every phase of the project – from conception through to commissioning.

Trust and openness between partners ensure that mutual success is achieved. Thanks to the customised dimensioning and equipping of the boiler systems, individual solutions can be created and modules retro-fitted easily.

Precision due to welding in ideal position

Thanks to horizontal welding with highly modern welding processes, a more homogeneous structure, a deeper root penetration and notch-free welding surfaces are achieved.

Use of welding robots
Semi-automatic and fully automatic welding robots are used for consistently high quality on highly-stressed welding seams.

Low-stress materials

Modern plasma and laser cutting systems ensure smooth metal processing and cutting. This means that our boilers have higher stress reserves during operation.

In-house manufacture of flame tubes
All smooth and corrugated flame tubes are manufactured in-house and are subject to the most stringent quality requirements.

Health and safety at work and promotion of young talent

Only happy and focused employees will deliver top quality. The very latest safety concepts and equipment and materials for the work to be carried out are part of our overall manufacturing concept, just like the training and further education of our staff.

Experts with certified knowledge
Our nearly 200 boiler welders have more than 1,000 welding exam qualifications. This means that welding of the highest level in accordance with internationally recognised standards is achieved.

Optimum design

Thanks to an ideal ratio between water content and steam chamber, Bosch boilers are optimised in their design for rapid heating and a high level of steam quality. Ideal temperature distribution and release of vapour bubbles enables the boilers to be operated very efficiently even during periods of dynamic loads. Compared to other boiler designs, the Bosch design with its high steam chamber minimises high-water shutdowns and water entrainment. Our intelligent three-component control, combined with pilot signals from large consumers and less frequent pre-ventilation (burner starts), also enables the boiler to react particularly quickly and reliably to load peaks.

High level of durability

The boiler design traditionally used in old steam locomotives has been continuously developed. The design with its fully inserted flame tube and without stud bolts offers the maximum level of robustness and an increased resistance to cold starts.

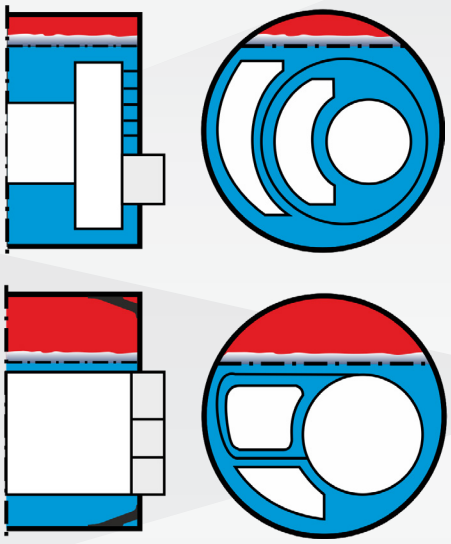

Old boiler construction with stud bolts (upper drawing). Boiler construction from Bosch (bottom drawing): With optimised steam chamber and optimised power transmission between flame tube and boiler body for long service life.

Certified quality

We manufacture our products in line with current standards and in accordance with the relevant applicable specifications for over 140 countries. The quality management systems in our factories are certified in accordance with strict guidelines. At the customer's request, we also carry out additional checks.

Maximum quality monitoring

We consider quality to be a top priority. Plant inspectors certified by TÜV and TÜV employees monitor and document our quality during manufacture and through to acceptance.

Precision and analysis

An in-house laboratory for welded seam inspections and material analysis provides maximum transparency. Up to 100 % of the welding seams of the pressure vessel are X-ray inspected. In total, more than 25,000 X-ray images are analysed in our three X-ray chambers every year.

Energy-saving system technology

Project-specific system solutions with perfectly matched modules and smart controls reduce energy consumption, improve the CO_2 balance and achieve complete automation for high operational reliability.

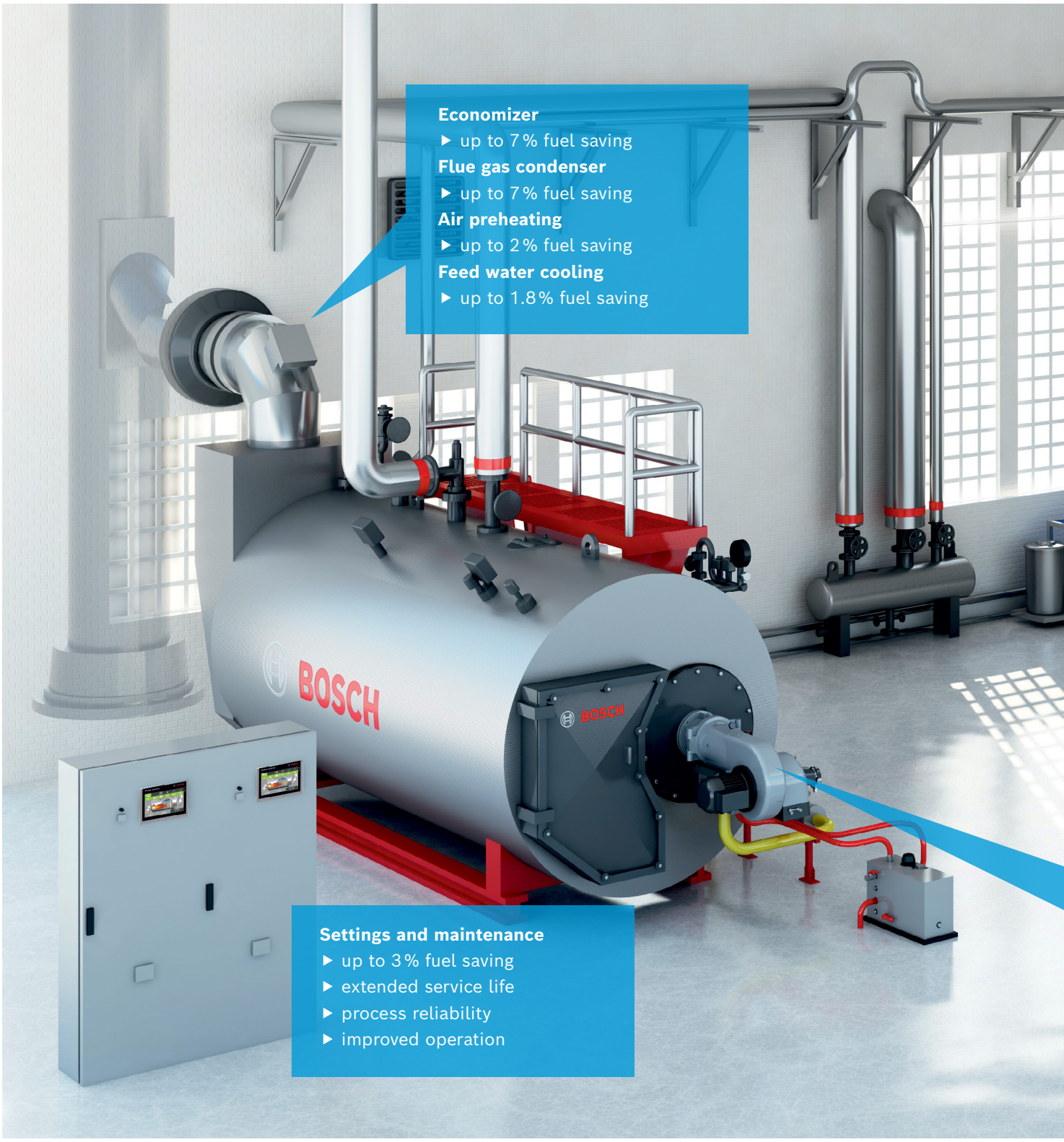

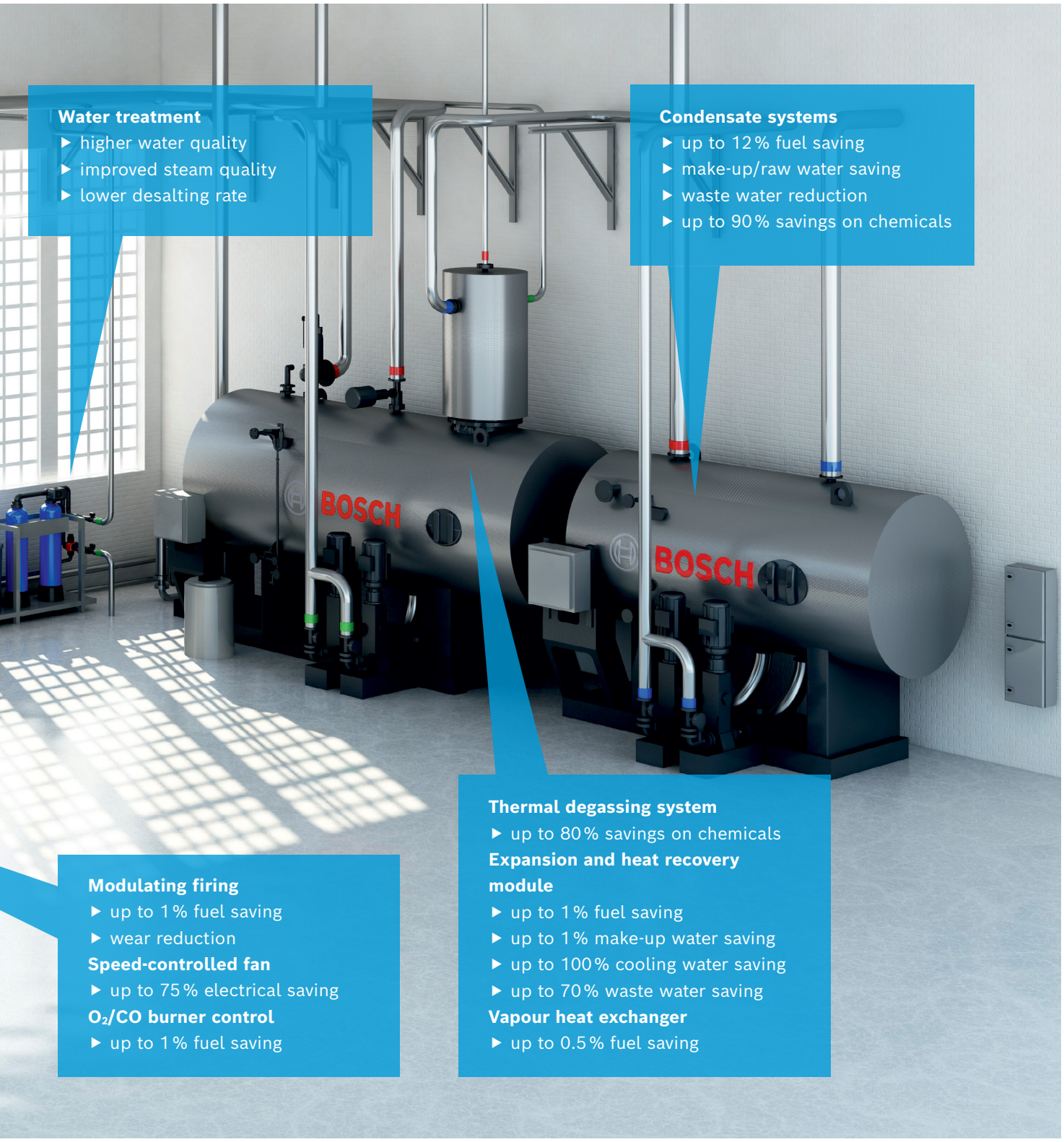

Water treatment
- higher water quality
- improved steam quality
- lower desalting rate

Condensate systems
- up to 12 % fuel saving
- make-up/raw water saving
- waste water reduction
- up to 90 % savings on chemicals

Modulating firing
- up to 1 % fuel saving
- wear reduction

Speed-controlled fan
- up to 75 % electrical saving

O_2/CO burner control
- up to 1 % fuel saving

Thermal degassing system
- up to 80 % savings on chemicals

Expansion and heat recovery module
- up to 1 % fuel saving
- up to 1 % make-up water saving
- up to 100 % cooling water saving
- up to 70 % waste water saving

Vapour heat exchanger
- up to 0.5 % fuel saving

Bosch electric steam boiler ELSB

The ELSB (Electric Steam Boiler) is a highly efficient, electrically heated steam generator for 350 to 7 500 kg/h steam at up to 24 bar. When operated with green electricity, the boiler enables a CO_2 neutral steam supply.

Technical data ELSB

Heat transfer medium	High-pressure saturated steam
Output	from 350 to 7.500 kg/h
Energy source	Electricity (400/690 V)
Max. safety pressure	up to 24 bar
Max. temperature	up to 224 °C
Max. efficiency	up to 99.6 %

Sustainable steam with green electricity

- Generate up to 7.5 t/h steam highly efficiently using just electricity – no combustion, no emissions
- High steam quality, excellent dynamics, full flexibility
- Reduced expenditure: No flue gas, no fuel supply
- Application-specific design and particularly reliable operation
- Smart boiler control and seamless system integration
- Clever control: Specific use of electricity surpluses (optional)
- System equipment and service from a single source

With the ELSB, you generate up to 7.5 t/h of steam per unit at a maximum of 24 bar – **with up to 99.6 % boiler efficiency.** When using renewable electricity, its operation is **completely CO_2-neutral** and particularly environmentally friendly.

The electric boiler from Bosch is individually configured, manufactured and equipped **for your specific application**. Replacement components are integrated into the heating assembly as standard in order to increase long-term availability. The ELSB can also be integrated into existing boiler systems, enabling for **multivalent operation**.

The steam chamber on the ELSB produces **high quality steam** and has low residual steam moisture. Thanks to its **variable output**, the thyristor circuit of the control achieves an extremely high level of efficiency across the entire load range. Furthermore, the output can be automatically adjusted to your requirements or to available surpluses in the self-generated electricity.

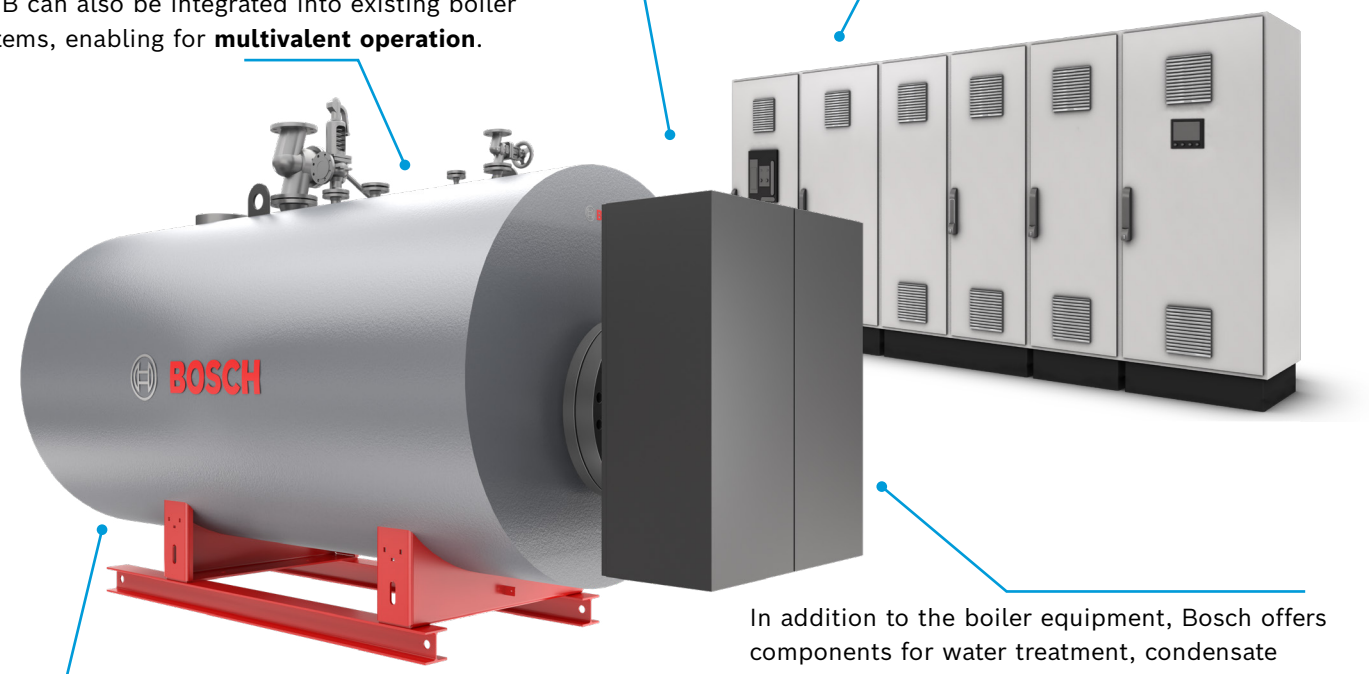

The ELSB electrical steam boiler **does not emit any flue gas**. Neither the chimney, the flue gas after-treatment components nor the infrastructure for the fuel supply are required at the installation site. There is also no need for approval or maintenance for the flue system. This **reduces the space requirement, as well as the duration and costs** for the installation.

In addition to the boiler equipment, Bosch offers components for water treatment, condensate management and energy saving for the ELSB. In accordance with your specific requirements, you receive a **complete system from a single source**. Bosch's industrial service is available for **pre- and after-sales advice and maintenance** of your ELSB system.

Design

The durable ELSB electric steam boiler offers a high steam space and proven Bosch quality with an efficiency of up to 99.6 %. The heating bundle and boiler are optimally matched to each other. The integrated heating bundle has backup elements for many years of operation and, thanks to thyristor technology, offers continuous boiler control from 0–100 %.

As there is no combustion, the installation effort is reduced. No flue gas system is required and thus no chimney in the case of a purely electric steam supply. Fuel supply and storage are also not required.
The safety equipment includes safety temperature limiters in the heating bundle and water level limitation/control.

Fully automatic water service module WSM-V for reliable supply of the boiler with feed water

Kompatible Produkte

- Condensate service module CSM
- Water service module WSM
- Water treatment module WTM
- Pump module PM
- Water analyzer WA
- Feed water regulation module RM
- Blow-down, expansion and cooling module BEM
- Expansion and heat recovery module EHM
- Expansion, heat recovery and blow-down module EHB
- Vapour cooler VC
- Steam distributor SD
- Steam accumulator module SAM
- Boiler control BCO
- System control SCO

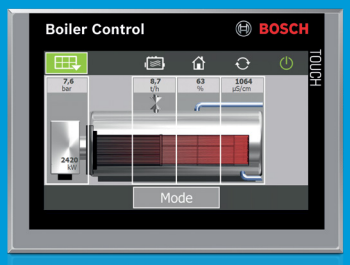

The **BCO boiler control system** lets you easily control the ELSB using a touch display. The **SCO system control** also offers the option to integrate multi-boiler systems. Both Bosch controls are compatible with all common control systems and, as an option, come with protected remote access.

CO_2 neutral steam in Iceland

100 % electric and climate-neutral: this is the new ELSB steam boiler at a fish factory in Iceland. The “green” steam supports the production of sustainable packaging and contributes to climate protection in the process.

In addition to emission-free steam generation, the Bosch plant is very impressive with it’s remarkably flexible operation. The electric steam boiler enables a fast and precise response to the varying demands of packaging production. Compared to a boiler with a burner, the ELSB can be operated at full load faster and has a wider control range – continuous from 0–100 %. In addition, there are no pre-ventilation losses when the boiler is switched on and off. The electrical power supply and the boiler control unit (BCO) are ideally matched to the system. The BCO optimises the interaction between the ELSB, steam accumulator and consumers in production. This ensures consistently high steam quality, efficiency and process reliability. A water service module supplies the boiler automatically with thermally treated feed water.

The ELSB electric steam boiler makes the Icelandic customer’s steam processes completely CO_2 neutral, highly efficient and offers excellent dynamics. A customised and future-proof solution from Bosch.

An ELSB from Bosch with 4 t/h of steam is used for the production of sustainable packaging. The electricity used comes from renewable sources such as hydropower, making steam generation particularly sustainable and resource-friendly.

UNIVERSAL steam boiler CSB

Ultra-compact steam boiler for the smaller output range. Enables future-proof low emissions and a high efficiency level. The ideal solution for food and beverage industries, manufacturing industries, hospitals, laundries and hotels.

Technical data of the CSB

Heat transfer medium	Low-pressure saturated steam	High-pressure saturated steam
Design	Shell boiler	
Output in kg/h	300 up to 4,800	300 up to 5,200
Safety pressure in bar	up to 0.5	up to 16
Max. temperature in °C	110	204
Fuel	Oil, gas, multi-fuel firing Biogas, bio-oil, hydrogen, special fuels	

High level of efficiency for reduced operating costs

The integrated economizer uses flue gas heat to reduce fuel consumption and lower the flue gas temperature. Together with the innovative insulation concept and Bosch compound insulating materials, this allows for a particularly high level of boiler efficiency.

- High efficiency rating of up to 95.3 % with integrated economizer (optional)
- Reduced power consumption of the burner fan thanks to low resistance on the flue gas side
- Fit for the future: Thanks to the low-NO_X burner and generously dimensioned flame tube, the boiler already reliably falls below the strict EU emissions limits of the MCPD for 2025 and/or local emissions regulations

User-friendly operating concept

- Compact control CSC with touchscreen mounted on the boiler
- Alternatively available with boiler control BCO which offers additional functions: Remote access via MEC Remote, connection to automation systems and efficiency assistant MEC Optimize

Reliable performance and customised equipment

The steam-drying unit and the generously dimensioned steam chamber in the Universal CSB design guarantee a high level of steam quality that suits your processes.

- Available in high-pressure and low-pressure versions
- Flexible boiler equipment including firing unit, flue gas heat exchanger, water treatment and control system
- Universally applicable with different fuels and multi-fuel firing
- Certified in accordance with the European Pressure Equipment Directive (high-pressure steam boilers), internationally applicable with country-specific safety equipment

Quick installation and hassle-free maintenance

- Compact design optimised for ease of transport and simple installation
- Smooth commissioning thanks to pre-wired compact control and pre-assembled modules
- Easy cleaning, maintenance and service thanks to telescopic reversing chamber
- No inserts in the heat exchanger tubes allow good accessibility

Design

The steam-drying unit and the generously dimensioned steam chamber in the Universal CSB design guarantee a high level of steam quality that suits your processes. The high-quality production of the entire boiler body using the latest in welding robots allows for a particularly high level of robustness and durability.

Thanks to the special helical heat exchanger tubes, the heat exchange per m^2 of heating surface is improved significantly. The use of inserts in the exhaust system is not required, which makes cleaning significantly easier. Furthermore, the energy requirement for the burner fan is reduced thanks to the low flue-gas-side resistance.

The telescopic reversing chamber of the industrial steam boiler makes maintenance and inspection work easier. It can be opened safely by a sliding system without needing very much space. Likewise, the entire rear tube plate is fully accessible.

Compatible products

- Flue gas heat exchanger ECO
- Feed water cooling module FWM
- Condensate service module CSM
- Water service module WSM
- Water treatment module WTM
- Pump module PM
- Water analyzer WA
- Feed water regulation module RM
- Blow-down, expansion and cooling module BEM
- Expansion and heat recovery module EHM
- Expansion, heat recovery and blow-down module EHB
- Vapour cooler VC
- Gas regulation module GRM
- Oil supply module OSM
- Oil circulation module OCM
- Oil pressure regulation module ORM
- Oil preheater module OPM
- Steam distributor SD
- Steam accumulator module SAM
- Controls for optimising combustion
- Compact steam boiler control CSC
- Boiler control BCO
- System control SCO
- Remote access MEC Remote
- Digital efficiency assistant MEC Optimize

For further information please see our brochure ‘Boiler and efficiency components’.

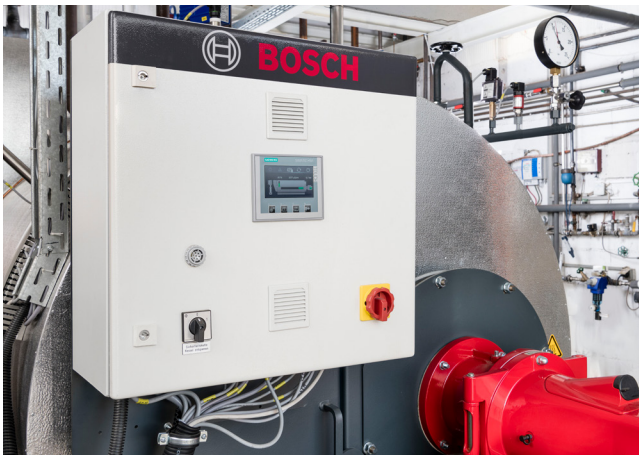

Compact steam boiler control CSC

Equipment

We offer the UNIVERSAL steam boiler CSB as a complete boiler system including equipment*. The basic equipment comprises the boiler pressure vessel, the control and safety components, the burner unit, an integrated economizer, a pump module, a terminal box and the compact control CSC mounted on the boiler. Alternatively, you can select the boiler control BCO that allows connection to automation systems. The sensors, actuators and country-specific safety equipment are already wired and combined in the terminal box. Pre-assembled, plug-in and coded cable bundles simplify the connection between the boiler control cabinet and the terminal box.

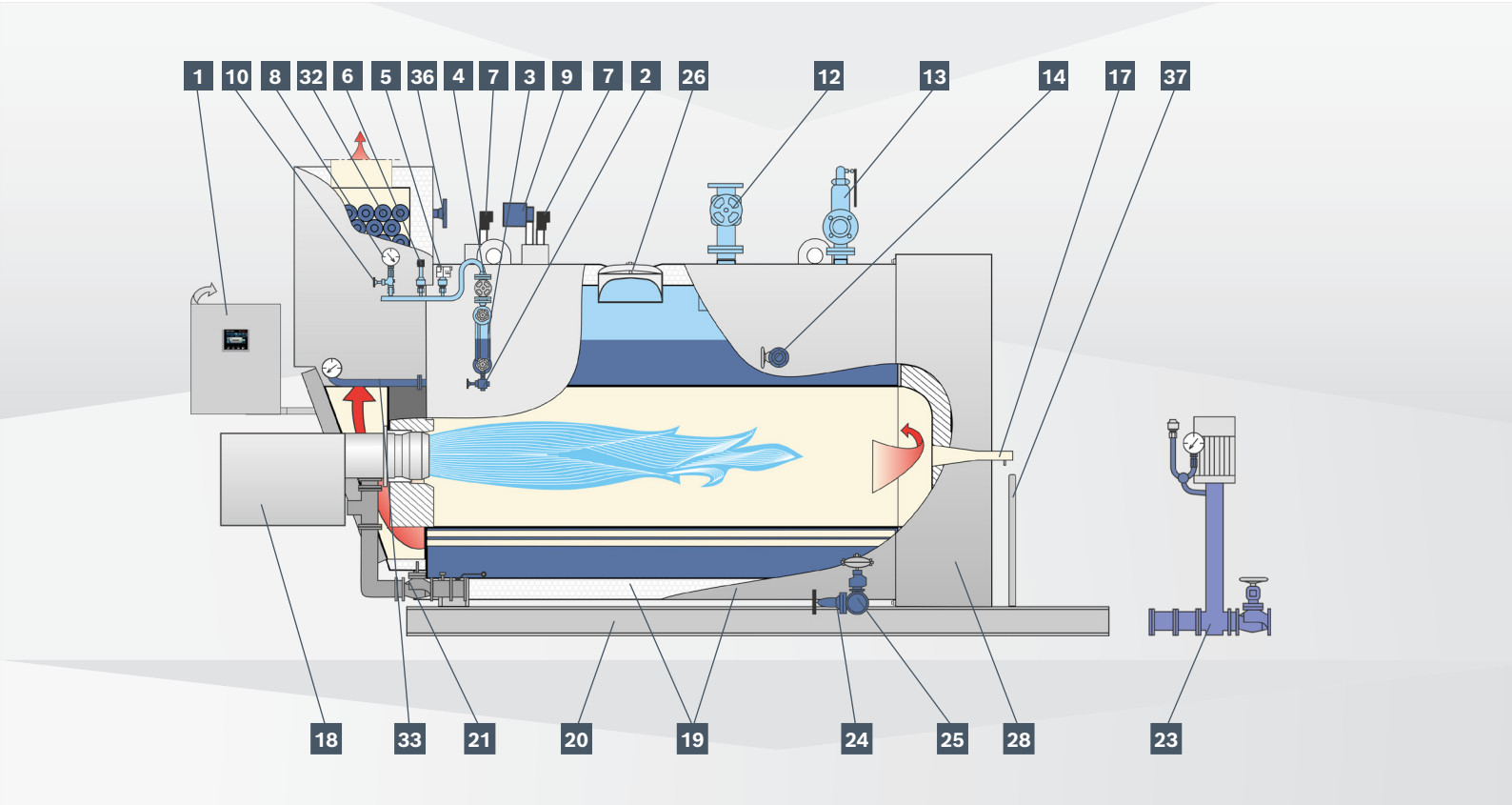

1 Control cabinet with compact steam control CSC, swivel-mounted (alternatively boiler control BCO)
2 Blow-off tap
3 Reflective water level indicator
4 Manostat tube shut-off valve, maintenance-free
5 Pressure limiter
6 Pressure transducer (4–20 mA)
7 Low-level limiter electrode
8 Pressure gauge
9 Level transducer (4–20 mA)
10 Pressure gauge shut-off valve with testing function
12 Steam removal valve
13 Full-lift safety valve
14 Desalting and fully automatic conductivity measurement (here not drawn)
17 Sight hole
18 Burner
19 Insulation with protective shell
20 Base frame
21 Gas regulation module
23 Pump module
24 Drain shut-off valve, maintenance-free
25 Quick shut-off blow-down valve
26 Inspection opening, steam side
28 Telescopic rear reversing chamber for easy inspection
32 Flue gas heat exchanger ECO
33 Connection piping ECO/boiler
36 Water inlet connection ECO
37 Bow-type handle for reversing chamber

*The equipment level is variable and can be freely configured to customer requirements.

UNIVERSAL steam boiler U-MB

The product designation U-MB stands for “UNIVERSAL Modular Boiler” (three-pass steam boiler in modular design). The U-MB type consists of several modules, which fulfil your individual requirements perfectly. Typical application areas are the food and beverage industry, laundry and cleaning businesses, as well as smaller industrial companies.

High level of efficiency for reduced operating costs

The boiler components are configured with a focus on low emissions, high steam quality and optimum energy efficiency.

- High level of efficiency due to the integrated economizer
- Maximisation of efficiency thanks to modular heat recovery modules

User-friendly operating concept

- Individually configurable boiler control BCO
- Automatic start-up control SUC
- Ready to connect to automation systems
- Digital efficiency assistant MEC Optimize
- Protected remote access MEC Remote

Reliable performance and customised equipment

The three-pass steam boiler can be used universally for all applications. You can combine the boiler with all the other available system components from our modular range for fuel and water supply, water disposal, water analysis and heat recovery.

- Comprehensive, series-wide basic equipment
- Shell boiler and three-pass technology
- Small space requirement due to compact footprint
- The modular design, which is based on the systematic use of design features and parts that are also used in other type series, ensures a particularly attractive price-performance ratio

Quick installation and hassle-free maintenance

- Compact design for bringing the boiler into site easily if space is limited
- Reduced installation effort thanks to supply as a single unit – the equipment, firing and economizer have already been fitted in the factory
- Simplified wiring on site thanks to plug-in connections
- Smooth commissioning due to pre-parameterised boiler control

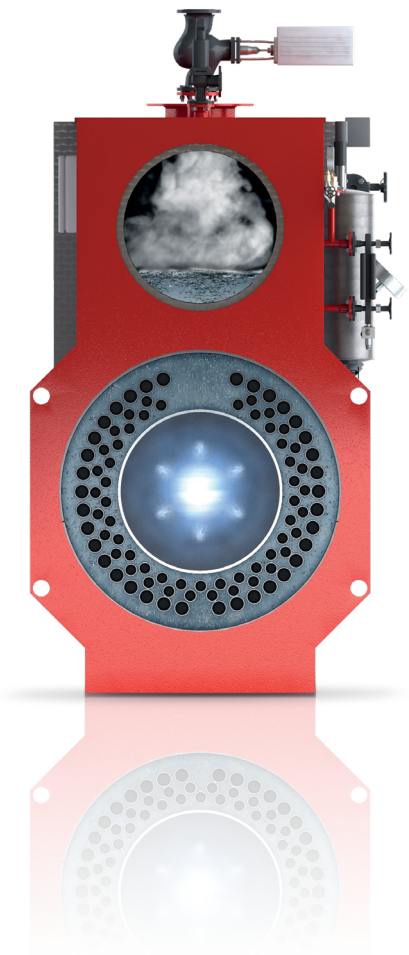

Technical data of the U-MB

Heat transfer medium	High-pressure saturated steam
Design	Three-pass flame tube/smoke tube technology
Output in kg/h	200 up to 2,000
Safety pressure in bar	up to 16
Max. temperature in °C	204
Fuel	Oil, gas, multi-fuel firing Biogas, bio-oil, hydrogen, special fuels

Design

The steam boiler U-MB is designed as a three-pass flame tube/smoke tube boiler. It consists of several modules, namely the heat generating section in three-pass design, the steam chamber on top of this, and an integrated economizer. Thanks to its three-pass design, there is no requirement for flow components in the smoke tubes.

The heat generating section of the U-MB is based on the UNIMAT boiler design – proven for decades and many thousands of times in practice. The generously sized flame tube geometry enables an efficient combustion process.

The choice of the steam section has a critical influence on the steam quality. A generous sizing has a very positive impact on the residual steam moisture.

The integrated economizer has a direct influence on the energy efficiency. The heat contained in the flue gases is used for preheating the boiler feed water, meaning that fuel consumption and emissions are reduced.

The steam boiler is tested for type examination and is manufactured to the strict guidelines of the Module D Quality Assurance System of the Pressure Equipment Directive.

Compatible products

- Flue gas heat exchanger ECO
- Flue gas heat exchanger ECO for condensing use
- Feed water cooling module FWM
- Condensate service module CSM
- Water service module WSM
- Water treatment module WTM
- Pump module PM
- Water analyzer WA
- Feed water regulation module RM
- Blow-down, expansion and cooling module BEM
- Expansion and heat recovery module EHM
- Expansion, heat recovery and blow-down module EHB
- Vapour cooler VC
- Gas regulation module GRM
- Oil supply module OSM
- Oil circulation module OCM
- Oil pressure regulation module ORM
- Oil preheater module OPM
- Steam distributor SD
- Steam accumulator module SAM
- Controls for optimising combustion
- Boiler control BCO
- System control SCO
- Remote access MEC Remote
- Digital efficiency assistant MEC Optimize

For further information please see our brochure ‘Boiler and efficiency components’.

Expansion, heat recovery and blow-down module EHB

Equipment

We offer the UNIVERSAL steam boiler U-MB as a complete boiler system including equipment.* The basic equipment comprises the boiler pressure vessel, the control and safety components, the burner unit, an integrated economizer, a pump module, a terminal box and the control cabinet including the intelligent boiler control BCO. The sensors, actuators and country-specific safety devices are already wired and combined in the terminal box. Pre-assembled, plug-in and coded cable bundles simplify the connection between the boiler control cabinet and the terminal box. The free-standing or wall-mounted control cabinet can be adapted and set up to best suit the requirements on site.

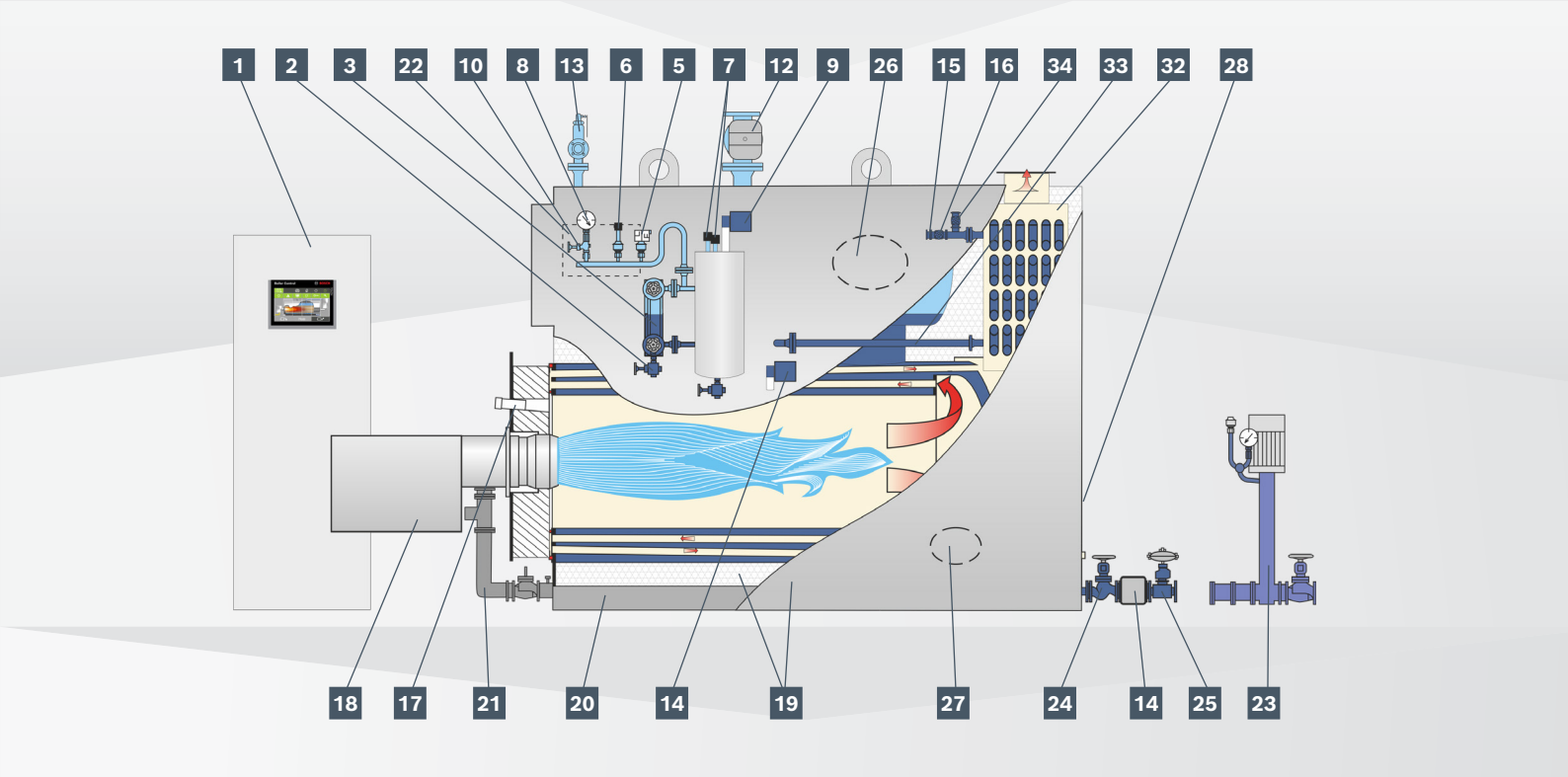

1 Control cabinet with boiler control BCO
2 Blow-off tap
3 Reflective water level indicator
5 Pressure limiter
6 Pressure transducer (4–20 mA)
7 Low-level limiter electrode
8 Pressure gauge
9 Level transducer (4–20 mA)
10 Pressure gauge shut-off valve with testing function
12 Steam removal valve
13 Full-lift safety valve
14 Fully automatic conductivity measurement and desalting
15 Feed water non-return valve
16 Feed water shut-off valve, maintenance-free
17 Sight hole
18 Burner
19 Insulation with protective shell
20 Base frame
21 Gas regulation module
22 Terminal box
23 Pump module
24 Drain shut-off valve, maintenance-free
25 Quick shut-off blow-down valve
26 Inspection opening, steam side
27 Inspection opening, water side
28 Inspection opening, flue gas side
32 Flue gas heat exchanger ECO
33 Connection piping ECO/boiler
34 Vent shut-off valve ECO

*The equipment level is variable and can be freely configured to customer requirements.

UNIVERSAL steam boiler UL-S/UL-SX

The boiler type UNIVERSAL UL-S sets new standards in your process heat supply. Highly efficient and reliable in use in food and beverage industries, in manufacturing industries and in municipal facilities.

Technical data	UL-S	UL-SX
Heat transfer medium	High-pressure saturated steam	High-pressure superheated steam
Design	Three-pass single-flame tube/smoke tube technology	Three-pass single-flame tube/smoke tube technology
Output in kg/h	1,250 up to 28,000	2,600 up to 28,000
Safety pressure in bar	up to 30	up to 30
Max. temperature in °C	235	300
Fuel	Oil, gas, multi-fuel firing Biogas, bio-oil, hydrogen, special fuels	Oil, gas, multi-fuel firing Biogas, bio-oil, hydrogen, special fuels

High level of efficiency for reduced operating costs

You can save up to 7 % with the integrated economizer for waste heat recovery. Other optional modules, such as continuous feed water control for a constant water level in the boiler, speed-controlled burner fans for electricity reduction and O_2/CO controls for optimum combustion quality, achieve an even higher efficiency and reduce the environmental impact.

- High level of efficiency due to three-pass technology, an integrated economizer and effective heat insulation concept
- Flue gas temperatures below 50 °C are possible with use of condensing technology
- Low-emission combustion down to below 50 mg NO_x thanks to the use of highly developed firing systems and careful matching of the best boiler and burner combination
- Also available as waste heat boiler for cost-efficient and environmentally friendly use of waste heat sources, for example in combination with CHP units or gas turbines

User-friendly operating concept

- Compact steam boiler control CSC for steam boilers up to 4,000 kg/h
- Individually configurable boiler control BCO
- Automatic start-up control SUC
- Ready to connect to automation systems
- Digital efficiency assistant MEC Optimize
- Protected remote access MEC Remote

Quick installation and hassle-free maintenance

- Simplified wiring on site thanks to plug-in connections
- Smooth commissioning thanks to pre-assembled modules and a pre-parameterised boiler control
- Easy to maintain – simple to inspect on both the flue gas side as well as the water side
- Easy subsequent extension and modernisation

Reliable performance and customised equipment

The proven three-pass design stands for highest quality, durability and operational safety. We manufacture the UL-S steam boiler according to customer requirements with capacities up to 28 tons of steam. The series can also be efficiently operated as an intelligently controlled boiler cascade.

- High level of pressure consistency and steam quality, even with widely fluctuating steam demand, thanks to a high steam chamber and three-component control
- Large steam formation surface thanks to asymmetric design
- Universally applicable with different fuels and multi-fuel firing
- Available as waste heat boiler with fourth pass and firing system or as pure waste heat boiler
- Optional superheater module for superheated steam generation
- Design that has been proven thousands of times in practice – durable and reliable

Design

Our three-pass patent dating from 1952 forms the basis for the outstanding and ongoing success of this type series. The lateral flame tube (1st pass) and the adjacent smoke tube bundles (2nd and 3rd pass) are ideally integrated into the pressure vessel together with the fully wetback reversing chamber. This design results in a large heating surface with smallest overall dimensions. Additionally, the UL-S boiler has thus a maximised steam chamber which is particularly advantageous for dynamic steam demands. The flame tube is fixed at both ends of the boiler body and occurring tensions can be passed on via diagonal stays (corner anchors). In comparison to stud bolt constructions the Bosch design increases robustness and durability of the boilers (as described on page 5 of this brochure).

Compatible products

- Flue gas heat exchanger ECO
- Flue gas heat exchanger ECO for condensing use
- Feed water cooling module FWM
- Condensate service module CSM
- Water service module WSM
- Water treatment module WTM
- Pump module PM
- Water analyzer WA
- Feed water regulation module RM
- Blow-down, expansion and cooling module BEM
- Expansion and heat recovery module EHM
- Expansion, heat recovery and blow-down module EHB
- Vapour cooler VC
- Air preheating system APH
- Gas regulation module GRM
- Oil supply module OSM
- Oil circulation module OCM
- Oil pressure regulation module ORM
- Oil preheater module OPM
- Steam distributor SD
- Steam accumulator module SAM
- Superheater module
- Controls for optimising combustion
- Compact steam boiler control CSC
- Boiler control BCO
- System control SCO
- Remote access MEC Remote
- Digital efficiency assistant MEC Optimize

For further information please see our brochure ‘Boiler and efficiency components’.

Integrated flue gas heat exchanger and flue gas heat exchanger for condensing use

Equipment

We offer the UNIVERSAL steam boiler UL-S/UL-SX as a complete boiler system including equipment*. The basic equipment comprises the boiler pressure vessel, the control and safety components, the burner unit, an integrated economizer, a pump module, a terminal box and the control cabinet including the intelligent boiler control BCO. Alternatively, you can use the compact steam control CSC for UL-S boilers with an output of up to 4,000 kg/h. The sensors, actuators and country-specific safety devices are already wired and combined in the terminal box. Pre-assembled, plug-in and coded cable bundles simplify the connection between the boiler control cabinet and the terminal box. The free-standing or wall-mounted control cabinet can be adapted and set up to best suit the requirements on site.

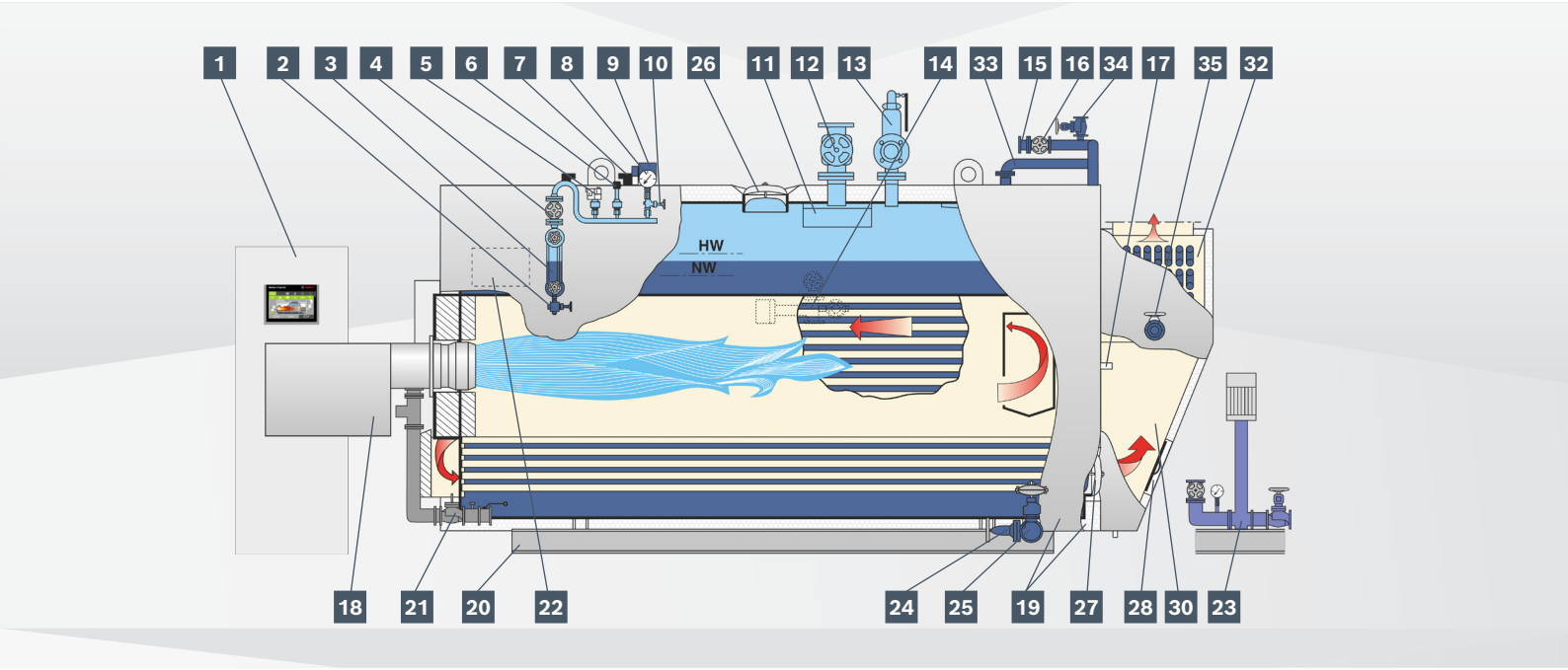

1 Control cabinet with boiler control BCO (CSC control version for boilers with an output of up to 4,000 kg/h as an alternative)
2 Blow-off tap
3 Reflective water level indicator
4 Manostat tube shut-off valve, maintenance-free
5 Pressure limiter
6 Pressure transducer (4–20 mA)
7 Low-level limiter electrode
8 Pressure gauge
9 Level transducer (4–20 mA)
10 Pressure gauge shut-off valve with testing function
11 Steam dryer
12 Steam removal valve
13 Full-lift safety valve
14 Fully automatic conductivity measurement and desalting
15 Feed water non-return valve
16 Feed water shut-off valve, maintenance-free
17 Sight hole
18 Burner
19 Insulation with protective shell
20 Base frame
21 Gas regulation module
22 Terminal box
23 Pump module
24 Drain shut-off valve, maintenance-free
25 Quick shut-off blow-down valve
26 Inspection opening, steam side
27 Inspection opening, water side
28 Inspection opening, flue gas side
30 Flue gas collection chamber
32 Flue gas heat exchanger ECO
33 Connection piping ECO/boiler
34 Vent shut-off valve ECO
35 Drain shut-off valve ECO (draining)

*The equipment level is variable and can be freely configured to customer requirements.

UNIVERSAL steam boiler ZFR/ZFR-X

The UNIVERSAL steam boiler ZFR with double-flame tube design convinces with its high performance and enormous control range. The ideal solution for energy suppliers, power plants, municipal facilities and manufacturing industries.

Technical data	ZFR	ZFR-X
Heat transfer medium	High-pressure saturated steam	High-pressure superheated steam
Design	Three-pass double-flame tube/smoke tube technology	Three-pass double-flame tube/smoke tube technology
Output in kg/h	18,000 up to 55,000	18,000 up to 55,000
Safety pressure in bar	up to 30	up to 30
Max. temperature in °C	235	300
Fuel	Oil, gas, multi-fuel firing Biogas, bio-oil, hydrogen, special fuels	Oil, gas, multi-fuel firing Biogas, bio-oil, hydrogen, special fuels

High level of efficiency for reduced operating costs

In the case of the UNIVERSAL steam boiler ZFR, the modulating output control for 'unrestricted' single-flame or double-flame tube operation and the continuous feed water control are mandatory. In order to use additional potential savings, we can offer you optional modules for increased efficiency, e. g. speed-controlled burner fans or combustion control through maintaining O_2 and/or CO levels.

- High level of efficiency due to three-pass technology and integrated economizer
- Effective heat insulation concept for minimal radiation losses
- Pollutant-reduced combustion thanks to the use of highly developed firing systems and careful matching of the best boiler and burner combination and flame tube geometry

User-friendly operating concept

- Individually configurable boiler control BCO
- Automatic start-up control SUC
- Ready to connect to automation systems
- Digital efficiency assistant MEC Optimize
- Protected remote access MEC Remote

Reliable performance and customised equipment

The double-flame tube boiler with separate flue gas paths is also suitable for operation with only one burner. You benefit from an enormous modulation range while maintaining the same high efficiency. We manufacture the ZFR on a project-specific basis and offer optional components, such as for superheated steam generation.

- High level of pressure consistency and steam quality even with widely fluctuating steam demand
- Extremely high level of control range can be achieved thanks to single-flame tube operation
- Universally applicable with different fuels and multi-fuel firing
- Acceptance in accordance with the European Pressure Equipment Directive, thus can be used worldwide
- Optional superheater module
- Design that has been proven thousands of times in practice – durable and reliable

Quick installation and hassle-free maintenance

- Simplified wiring on site thanks to plug-in connections
- Smooth commissioning thanks to pre-assembled modules and a pre-parameterised boiler control
- Easy to maintain – simple to inspect on both the flue gas side as well as the water side
- Easy subsequent extension and modernisation

Design

Its suitability for the unrestricted parallel or single operation of its firing units is not only due to the stable separation on the flue gas side. The special design measures for neutralising the tension forces in single-flame tube operation are crucial for permanent stability. The flame tubes are pushed through in the front and rear floors and welded tightly all around. In contrast to boiler designs with stud bolts, inadmissible bending stresses are avoided. The integrated rear flue gas chamber thus offers the advantages of the fully wetback cooling while significantly reducing its mechanical stress. Water circulation and heat transport are increased by means of guide profiles on the boiler base. Additionally, flow paths between the flame tubes and the smoke tube areas further accelerate the circulation.

A fully automatic operation with one or both burners is possible without restriction due to the approved single-flame tube operation. Even different fuels in both firing units do not present any barriers. The control range is doubled and each low load phase is run with one burner and with consequent gain in efficiency level.

For further information please see our technical report ‘Double-flame tube boilers’.

Compatible products

- Flue gas heat exchanger ECO
- Flue gas heat exchanger ECO for condensing use
- Feed water cooling module FWM
- Condensate service module CSM
- Water service module WSM
- Water treatment module WTM
- Pump module PM
- Water analyzer WA
- Feed water regulation module RM
- Blow-down, expansion and cooling module BEM
- Expansion and heat recovery module EHM
- Expansion, heat recovery and blow-down module EHB
- Vapour cooler VC
- Air preheating system APH
- Gas regulation module GRM
- Oil supply module OSM
- Oil circulation module OCM
- Oil pressure regulation module ORM
- Oil preheater module OPM
- Steam distributor SD
- Steam accumulator module SAM
- Superheater module
- Controls for optimising combustion
- Boiler control BCO
- System control SCO
- Remote access MEC Remote
- Digital efficiency assistant MEC Optimize

For further information please see our brochure ‘Boiler and efficiency components’.

Water service module WSM

Equipment

We offer the UNIVERSAL steam boiler ZFR/ZFR-X as a complete boiler system including equipment*. The basic equipment includes the boiler pressure vessel, the control and safety components, the burner unit, an integrated economizer, a pump module, a terminal box and the control cabinet including the intelligent boiler control BCO. The sensors, actuators and country-specific safety devices are already wired and combined in the terminal box. Pre-assembled, plug-in and coded cable bundles simplify the connection between the boiler control cabinet and the terminal box. The free-standing or wall-mounted control cabinet can be adapted and set up to best suit the requirements on site.

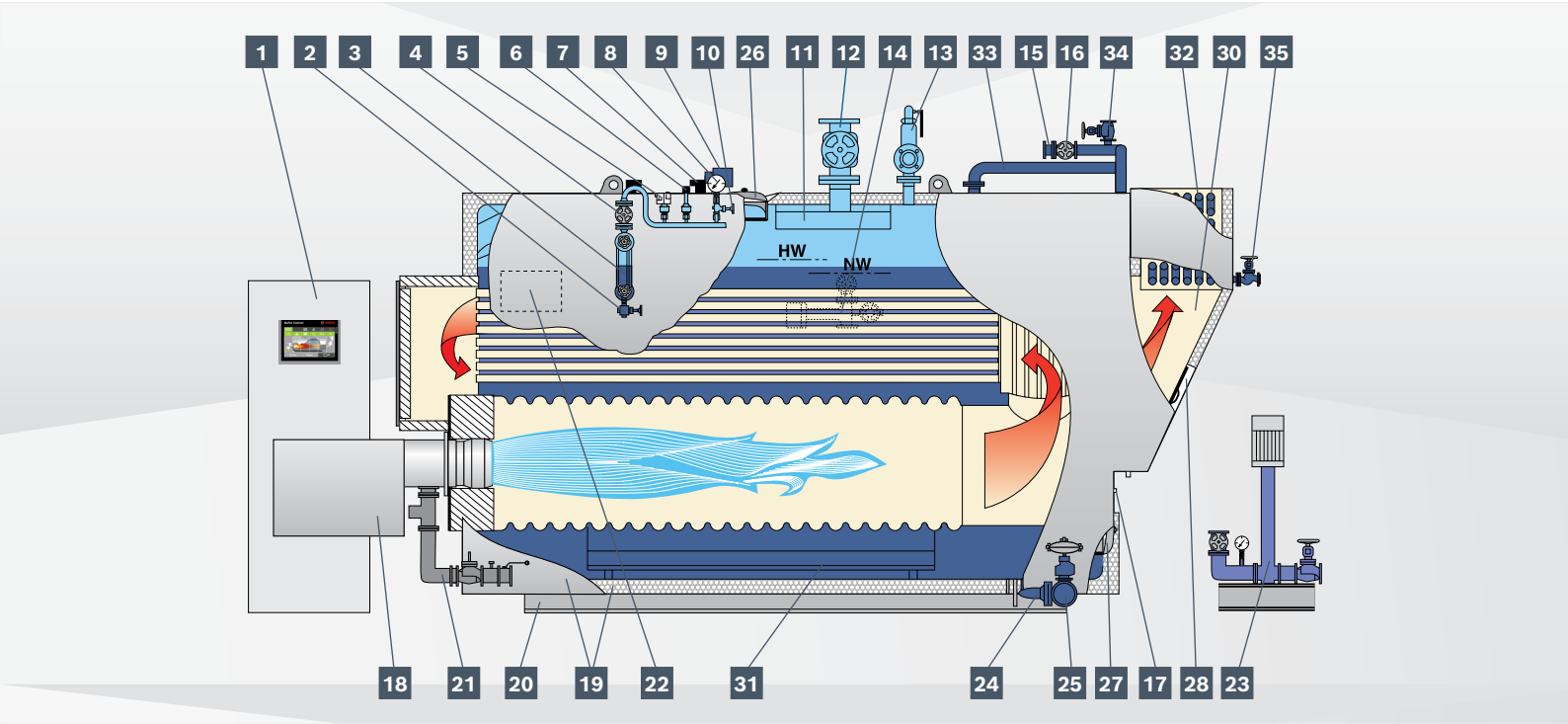

1 Control cabinet with boiler control BCO
2 Blow-off tap
3 Reflective water level indicator
4 Manostat tube shut-off valve, maintenance-free
5 Pressure limiter
6 Pressure transducer (4–20 mA)
7 Low-level limiter electrode
8 Pressure gauge
9 Level transducer (4–20 mA)
10 Pressure gauge shut-off valve with testing function
11 Steam dryer
12 Steam removal valve
13 Full-lift safety valve
14 Fully automatic conductivity measurement and desalting
15 Feed water non-return valve
16 Feed water shut-off valve, maintenance-free
17 Sight hole
18 Burner
19 Insulation with protective shell
20 Base frame
21 Gas regulation module
22 Terminal box
23 Pump module
24 Drain shut-off valve, maintenance-free
25 Quick shut-off blow-down valve
26 Inspection opening, steam side
27 Inspection opening, water side
28 Inspection opening, flue gas side
30 Flue gas collection chamber
31 Water circulation guide profiles
32 Flue gas heat exchanger ECO
33 Connection piping ECO/boiler
34 Vent shut-off valve ECO
35 Drain shut-off valve ECO (draining)

*The equipment level is variable and can be freely configured to customer requirements.

Superheater module

Single-flame and double-flame tube/smoke tube boilers with superheaters for superheated steam generation.

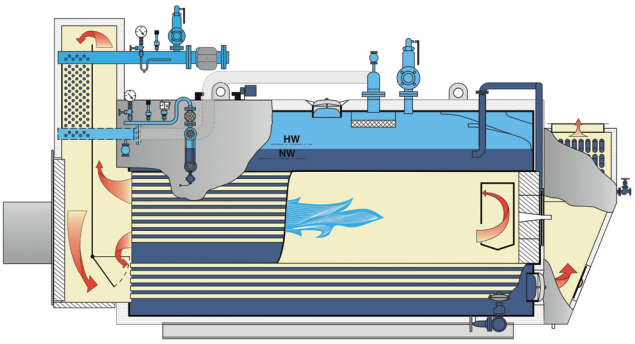

Sectional drawing UL-SX

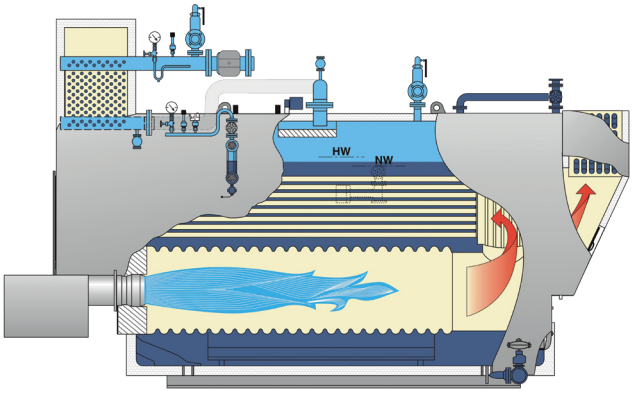

Sectional drawing ZFR-X

If superheated steam is required instead of saturated steam, a superheater module can be placed on the front reversing chamber. A bypass flap constantly controls the temperature of the superheated steam over a large load range.
The smoke tube areas remain easily accessible thanks to the hinged door of the reversing chamber.

- Modular system, controlled on the flue gas side – no injection water required for temperature control of the superheated steam
- Easy maintenance and installation – simple cleaning possibility of the second and third boiler pass
- Long service life thanks to low thermal loading of the heat exchanger bundle of the superheater

For further information please see our technical report ‘Superheater module’.

Reference power plant Ledvice in the Czech Republic

Four Bosch steam boilers ZFR-X reliably support the start-up process and the district heating network with 167 tons of superheated steam.

The Ledvice power plant in the Czech Republic, situated between the cities of Teplice and Bílina, is part of the energy company ČEZ. The energy supplier operates at this site, among others, a power unit with an electricity output of 660 MW. Based on the principle of combined heat and power generation, the waste heat produced during power generation is fed into the district heating network instead of simply being released unused into the atmosphere. Heat is supplied to a total of around 300 companies and 20,000 inhabitants.

Four ZFR-X double-flame tube boilers generate up to 167 tons of steam per hour for starting up the steam turbine for power generation. Their superheater modules increase the temperature to minimise residual moisture in the steam. The superheated steam improves the efficiency level of the plant and ensures a gentle start-up process. In addition, the boilers also support the district heating supply. Extensive safety and automation equipment allows for a high level of operation reliability and reduces supervision.

The superheater modules are installed on the front reversing chamber of the boilers.

Four-pass boiler with burner

The conventional fired boiler generates process heat while simultaneously utilising the heat potential from waste heat sources.

Technical data of the four-pass boiler UL-S

Heat transfer medium	High-pressure saturated steam
Design	Three-pass flame tube/smoke tube boiler with integrated fourth smoke tube pass
Output in kg/h	700 up to 28,000
Safety pressure in bar	up to 30
Max. flue gas temperature of the waste heat source in °C	630
Min. flue gas volumes of the waste heat source in kg/h	500
Max. flue gas volumes of the waste heat source in kg/h	28,000
Fuel of the waste heat source	Natural gas (other flue gas types on request)
Output range of combinable CHP units in MWel	Approx. 0.2 to 4
Fuel of the boiler firing	Oil, gas, multi-fuel firing Biogas, bio-oil, hydrogen, special fuels

Benefits

- Generates up to 15 % of the nominal output by using waste heat sources via its fourth pass
- Improved efficiency level, less fuel consumption and reduced emissions
- High supply reliability thanks to own firing
- Normally no peak load boiler needed – saves space, equipment and costs
- Matched, modular system for easy planning and fast installation
- Intelligent boiler control ensures automated and reliable operation
- Smooth commissioning due to pre-parameterised boiler control
- Simplified wiring on site thanks to plug-in connections
- Robust, reliable and durable
- Reduced component diversity with regard to spare parts inventory
- Service from a single source

This industrial steam boiler variant is a conventional fired three-pass boiler with additional integrated smoke tube pass for the utilisation of waste heat. It is predominantly used in combination with CHP plants or gas turbines. In the fourth pass of the boiler, the hot flue gases from the upstream combustion processes are used to help generate process heat.

When using waste heat boilers without firing, additional peak load boilers are usually required. With the design variant with own firing system, the fourth pass supplies the base load, and the firing system switches on when demand increases. There is no need for a further pressure vessel with complete safety technology and the associated space requirement and investment costs. In addition, the use of heat exchangers in the flue gas system of the CHP is reduced.

Design

The design of our waste heat boiler with burner corresponds to the basic design of the UL-S series. We manufacture the boiler with an additional integrated smoke tube pass (fourth pass).

Equipment

The equipment options are identical to that available for the steam boiler UL-S series.

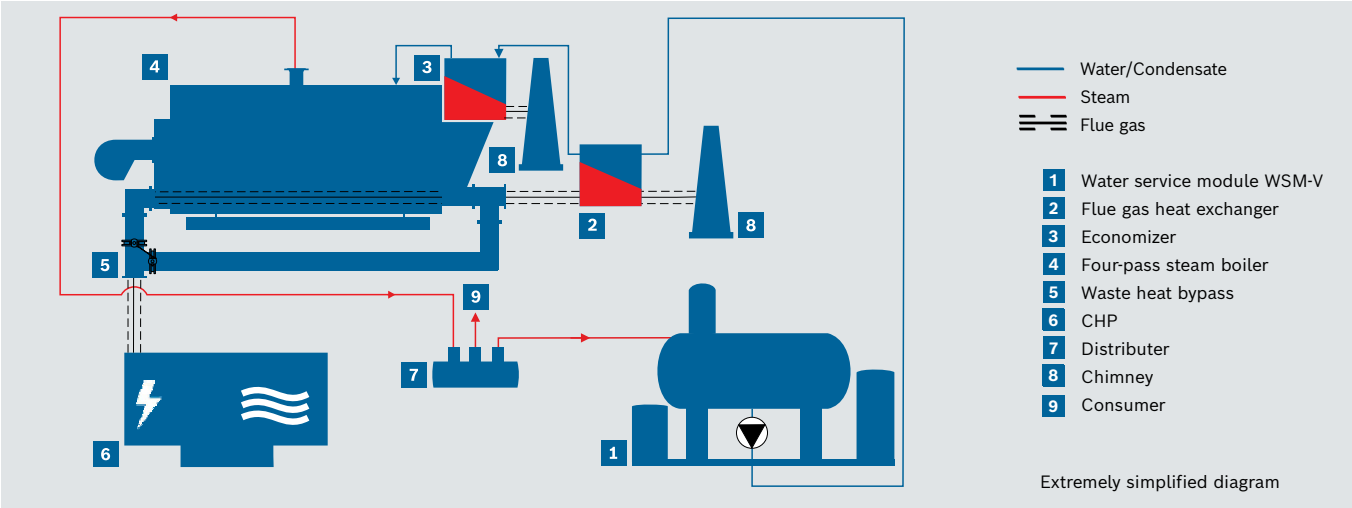

UNIVERSAL heat recovery steam boiler HRSB

The heat recovery boiler uses accumulated flue gas heat to generate cost-efficient process steam.

Used in combination with a combined heat and power unit, the heat recovery steam boiler HRSB can play a significant part for using primary energy efficiently. The hot flue gases from the upstream combustion processes are passed to the heat recovery boiler and used for steam generation. Thanks to its modular design and compact dimensions, it is the ideal choice for both new plants and modernisation projects alike.

Design

The heat recovery steam boiler, which is certified in accordance with the PED (Pressure Equipment Directive), is available in eight standardised versions. It consists of a highly efficient tubular heat exchanger. An optional economizer increases the efficiency even further. In addition, we offer a flue gas bypass. If no steam is extracted, the boiler will use it for diversion on the flue gas side. This means that the CHP unit or other waste heat sources can continue operating without interruption.

Equipment

The heat recovery steam boiler is insulated and features state-of-the-art safety equipment. The flue gas bypass is supplied separately to facilitate transportation and is fitted and insulated on site.

The boiler control BCO, based on PLC, can be controlled via touchscreen and is housed in a separate floor standing or wall-mounted control cabinet.

Technical data of the HRSB

Heat transfer medium	High-pressure saturated steam
Design	Heat recovery shell boiler
Output in kg/h	400 up to 4,100
Safety pressure in bar	10 and 16
Max. flue gas temperature of the waste heat source in °C	550
Min. flue gas volumes of the waste heat source in kg/h	500
Max. flue gas volumes of the waste heat source in kg/h	23,500
Fuel of the waste heat source	Natural gas (other flue gas types on request)
Output range of combinable CHP units in MWel	Approx. 0.5 to 4

Benefits

- Increase in efficiency and environmental responsibility through use of waste heat sources
- Matched, modular system for easy planning and fast installation
- High efficiency through efficient tubular heat exchanger and good thermal insulation
- Additional efficiency gain thanks to optional integrated economizer
- Intelligent boiler control ensures automated and reliable operation
- Smooth commissioning due to pre-parameterised boiler control
- Simplified wiring on site thanks to plug-in connections
- Robust, reliable and durable
- Reduced component diversity with regard to spare parts inventory
- Service from a single source

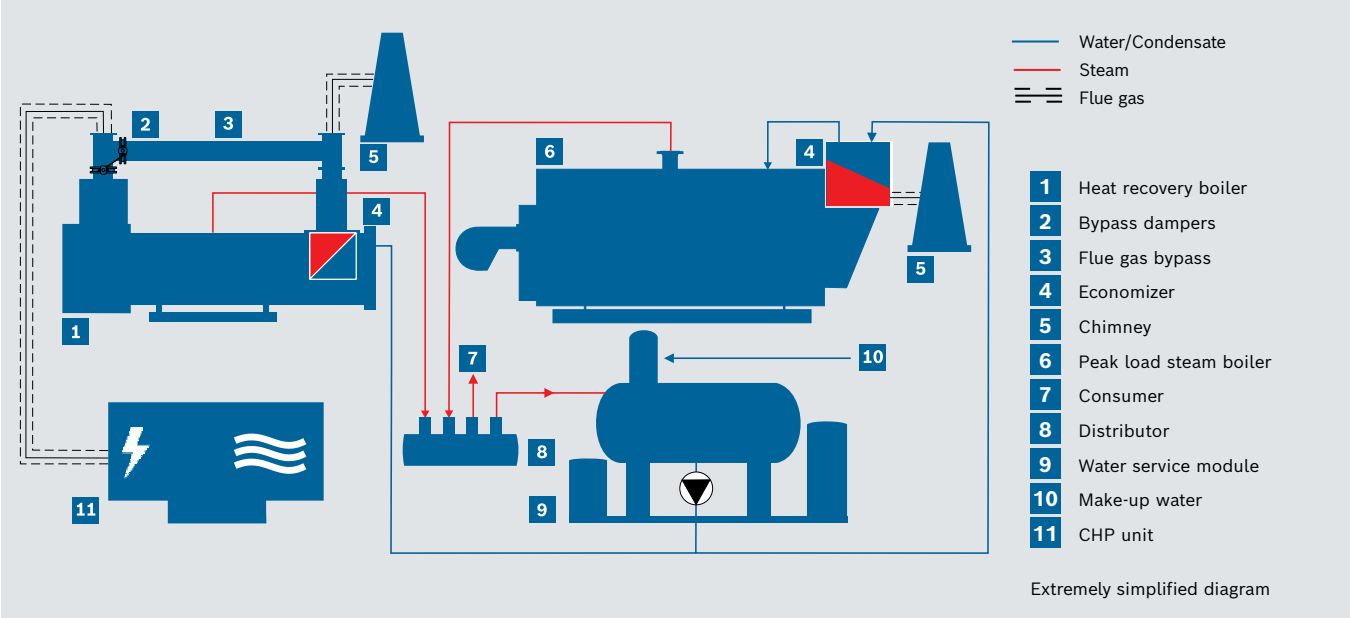

Extremely simplified diagram

UL-S series as three-pass waste heat boiler

- The UL-S series can also be used as pure waste heat boiler
- For use in high flue gas temperatures
- For use in combination with combined heat and power units or gas turbines
- Utilisation of waste heat for generating steam

Boiler control BCO

The individually configurable boiler control BCO optimises your boiler operation and ensures a high level of operational safety. An intelligent control solution for all Bosch steam boilers.

The BCO offers fully automatic and efficient boiler operation with smart control features. Bosch provides the control system project-specific configured and tested in a fully wired wall or floor-standing control cabinet. Combined with our system control SCO, you can network up to six boilers and all system components via one operating unit.

- Customer-specific, fully automatic boiler operation
- Comprehensive automatic functions such as output/level control, low load control, operating hours counter, number of burner starts, operating and fault messages
- Storage of all operationally relevant measured values for maximum data transparency
- Integrated protective functions for high supply and operational reliability
- Condition and efficiency monitoring
- Ideal water conditions due to automatic, conductivity-controlled desalting and blow-down process
- Compatible with all common automation systems for easy connection
- Optional fully automatic start-up control SUC
- Optional remote connection via MEC Remote

Compact steam boiler control CSC

The compact control unit is the ideal solution for Bosch boilers with capacities up to 4,000 kg/h steam. It provides all essential basic functions for convenient control and operation. Compared to the boiler control BCO for more complex plants, the CSC is a cost-effective alternative for single steam boilers.

- Colour touch display for easy operation
- Installed on the boiler at the factory or as a wall control cabinet, fully wired and functionally tested
- Power electronics for fuel supply, feed water pump, blow-down and desalting
- Ideal water conditions through fully automatic, conductivity-controlled desalting and blow-down

Digital efficiency assistant MEC Optimize

Based on the operating mode of the system, MEC Optimize predicts the service life of individual components, suggests measures to increase efficiency, and instructs the user in implementing them.

MEC Optimize is integrated in the boiler control cabinet and records all data from the boiler and other connected plant components. The operating data is stored locally for many years and evaluated via trend analyses. If the fuel consumption increases, for example, due to excessive desalting rates or soiling in the boiler, the efficiency assistant reports possible causes. As an option, it is possible to send notifications for defined cases directly to the operator's mobile phone via the remote connection technology MEC Remote.

Another important optimisation aspect is the maximisation of the boiler lifetime. MEC Optimize not only serves as a digital boiler logbook but interprets the entered values and helps the operator to identify and correct conditions that promote corrosion or are even safety-critical. MEC Optimize also helps to avoid production losses due to interrupted process heat: The permissible loads and switching cycles are stored for all important components. Based on the operating mode, the efficiency assistant determines the state of the component, predicts the probable remaining lifetime and supports in maintenance planning.

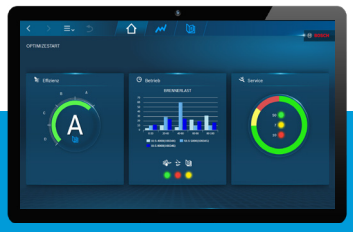

Benefits

- Improved energy efficiency – identification of increased energy losses through intelligent data analysis
- Durable boiler system – automatic monitoring of the operating behaviour
- Increased system availability – wear prognoses allow for optimum maintenance planning
- Higher operating safety – intelligent boiler logbook with automatic evaluation of the test data
- Historical operating data – continuous data acquisition for easy system optimisation and troubleshooting
- Digital document storage – all important documents are saved locally and can be retrieved at any time
- Optional remote connection via MEC Remote – sends current system status and reports important events via SMS or e-mail to the operator
- Easy integration of the system into automation systems (BACnet IP, Modbus TCP, OPC UA) or visualisation on a PC/tablet

Remote access MEC Remote

Using MEC Remote, operators can gain remote access to their boiler system conveniently and securely. This means the entire boiler and system control can be visualised using standard Internet-enabled devices.

MEC Remote is the ideal solution for all companies:

- In which the supervising personnel cannot be on-site constantly
- Operating single or multi-boiler systems requiring supervision
- With on-call service, e. g. at the weekends

Using the overview map of MEC Remote, you can monitor all your boiler systems around the world. The secure remote access allows you to visualise the surface of the control system and retrieve all relevant boiler data. As an option, MEC Remote can send alarm notifications via SMS or e-mail in combination with MEC Optimize. This significantly reduces the monitoring required for systems with high reliability requirements, such as those in constant operation.

Effective service support

On request also the Bosch experts can use the remote access to perform extended parametrisation, programming (PLC) and fault analysis directly on your system. If components fail, the service experts can utilise remote analysis to narrow down the cause and ensure they arrive with the appropriate equipment. This optimises service costs and increases system availability.

Secure remote access

We provide a sophisticated role concept that controls both access authorisation and approved visualisation levels. The remote access function itself has a multi-level security concept. The external data connection can be turned on or off on the hardware at any time in the boiler house using a key. The operating data from the industrial boilers are only saved locally on the system, not in a cloud.

Benefits

- Access to operating data, any time, anywhere
- Overview of all boiler systems at all locations
- Quick, convenient and cost-effective monitoring of system data
- Secure transmission thanks to a multi-level security concept
- If required, remote support from Bosch Industrial Service
- Optional alarm notifications via SMS or e-mail in combination with MEC Optimize

Bosch Industrial Service

Our industrial service for steam boilers and hot water boilers ensures plant availability even in the most demanding situations. You can rely on us.

Always there for you

We offer our customers a 24/7 service and ensure the shortest response times through a close network of service areas. During normal working hours you can get in touch directly with your responsible service technician. You will find the contact details on the control cabinet of your boiler system. For emergencies and outside business hours, the 24-hour hotline is available:

Service Hotline Germany/International:
+49 180 5667468*
Service Hotline Austria:
+43 810 810300**

Commissioning up to remote analysis

Our boiler service covers the entire life cycle of your plant from commissioning to regular maintenance. Service access via MEC Remote provides fast and cost-efficient remote support. Not sure whether your boiler system is still state-of-the-art and working efficiently? Here too, our experts provide support and evaluate potential modernisation measures based on your specific situation.

Reliable spare parts supply

Several thousand parts are available immediately from the factory. We are happy to support you with professional installation of the spare parts. For highest system availability and shortest reaction times we recommend to use our customised spare parts packages.

Spare parts hotline Germany/International:
+49 180 5010540*

* 0.14 euros/min. from the German fixed network; mobile phone maximum price 0.42 Euro/min.
** max. 0.10 euros/min. from the Austrian fixed network
Costs for calls from mobile networks and international connections may vary.

Reference Beck+Heun in Germany

Modular steam boiler system from Bosch increases energy efficiency by around 20 %.

The Beck+Heun GmbH, a leading manufacturer of roller shutter casings, had modernised their machine fleet with the objective of increasing production capacities and to produce resource-conserving. The new steam boilers UL-S have been dimensioned with a peak load of 8 t/h of steam. The process heat is used to support the pre-expanding of polystyrene granules which are subsequently processed for the fabrication of roller shutter casings. The previous process heat generation plant comprised three boilers with a total capacity of 5.5 t/h of steam.

The two efficient Bosch steam boilers supply a total of up to 8 t/h of steam.

Result

The new boiler system not only produces 45 % more steam, it is also around 20 % more efficient than the old system. The fuel demand was reduced by nearly 1,900 MWh a year. Furthermore, the minimised CO_2 emissions improve the ecological balance.

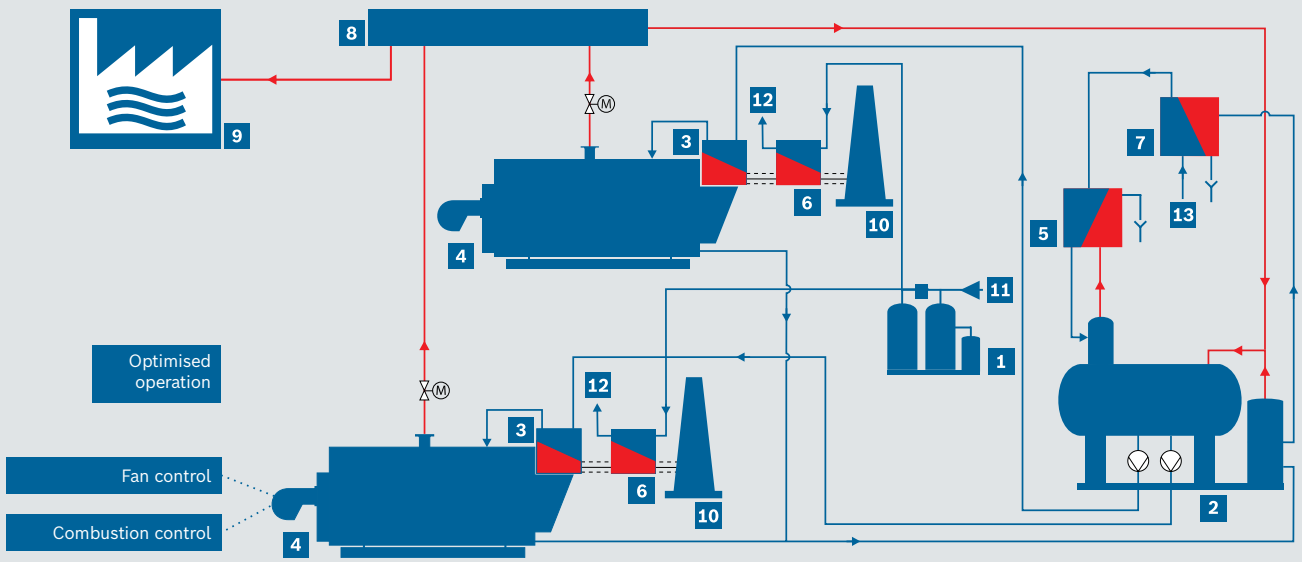

Water/Condensate
Steam
Flue gas

Extremely simplified diagram

1 Water treatment module
2 Water service module WSM-V
3 Economizer ECO
4 Steam boiler UL-S
5 Vapour cooler VC
6 Condensing heat exchanger
7 Expansion and heat recovery module EHB
8 Steam distributer SD
9 Production
10 Chimney
11 Fresh water
12 To expansion and heat recovery module EHB
13 From condensing heat exchanger

Reference Haribo in Hungary

Expansion of process heat supply with new Bosch boiler system and modular components for high efficiency and automation.

Due to production extension at the Hungarian location Nemesvámos, the confectionery manufacturer Haribo had a higher process heat demand. For many years, the existing U-HD steam boiler supplied the production with steam and heated the buildings. For the expansion of the steam supply Haribo selected a Bosch steam boiler UL-S with 4 t/h and optimally-matched components. The modular design and the pre-configured system control enabled a fast integration of the existing and new boiler plant into the steam network. 6 t/h of steam are now available for production processes. The heating supply was decoupled and is provided by a separate heating boiler from Bosch Thermotechnology.

Result

The new boiler system from Bosch is intelligently controlled and provides a reliable and energy-efficient operation. Regular maintenance services increase the availability and optimise the fuel consumption. Thanks to its modularity, the energy system can be easily expanded in case of further increases in capacity.

The new, modular steam boiler UL-S with heat recovery equipment for maximum efficiency.

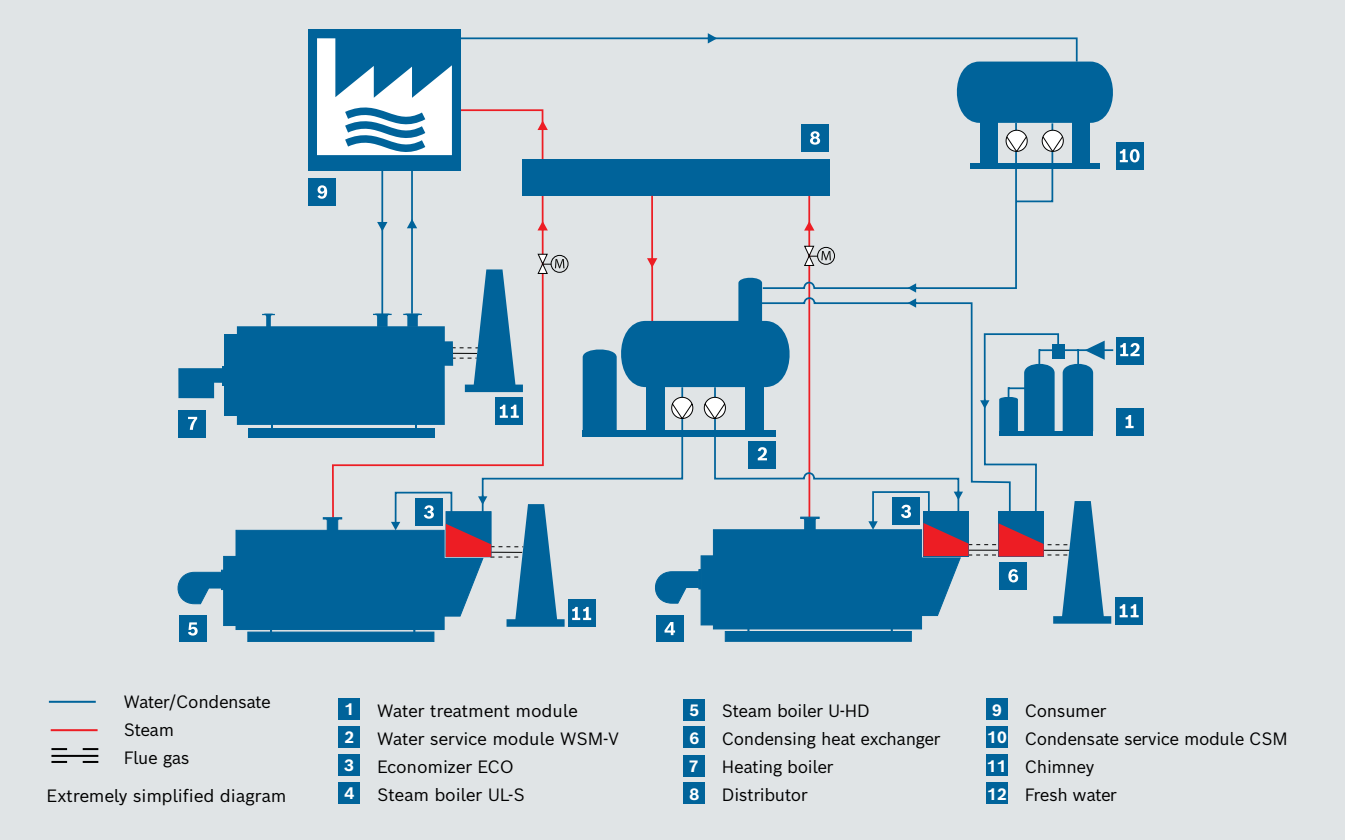

Bosch Industriekessel GmbH

Nuernberger Strasse 73
91710 Gunzenhausen
Germany
Tel. +49 9831 56253
Fax +49 9831 5692253
sales@bosch-industrial.com
Service Hotline +49 180 5667468*
Spare Parts Hotline +49 180 5010540*

Bosch Industriekessel Austria GmbH

Haldenweg 7
5500 Bischofshofen
Austria
Tel. +43 6462 2527300
Fax +43 6462 252766300
sales-at@bosch-industrial.com
Service Hotline +43 810 810300**
Spare Parts Hotline +49 180 5010540*

info@bosch-industrial.com
www.bosch-industrial.com
www.bosch-industrial.com/YouTube

* EUR 0.14/min from German landline; maximum mobile phone price: 0.42 Euro/min
** max. EUR 0.10/min from Austrian landline
Different charges may apply for calls from mobile networks and for international calls.