# Mini VRF Outdoor Unit
# Climate 5000 VRF

**MDCI Series - Triphase**

BOSCH

User manual
MDCI 40-3
MDCI 45-3

6720871971 (2017/02) EN

Thank you very much for purchasing our air conditioner.
Before using your air conditioner, please read this manual carefully and keep it for future reference.

## This air conditioner comprises an indoor unit, outdoor unit, and a connection pipe.

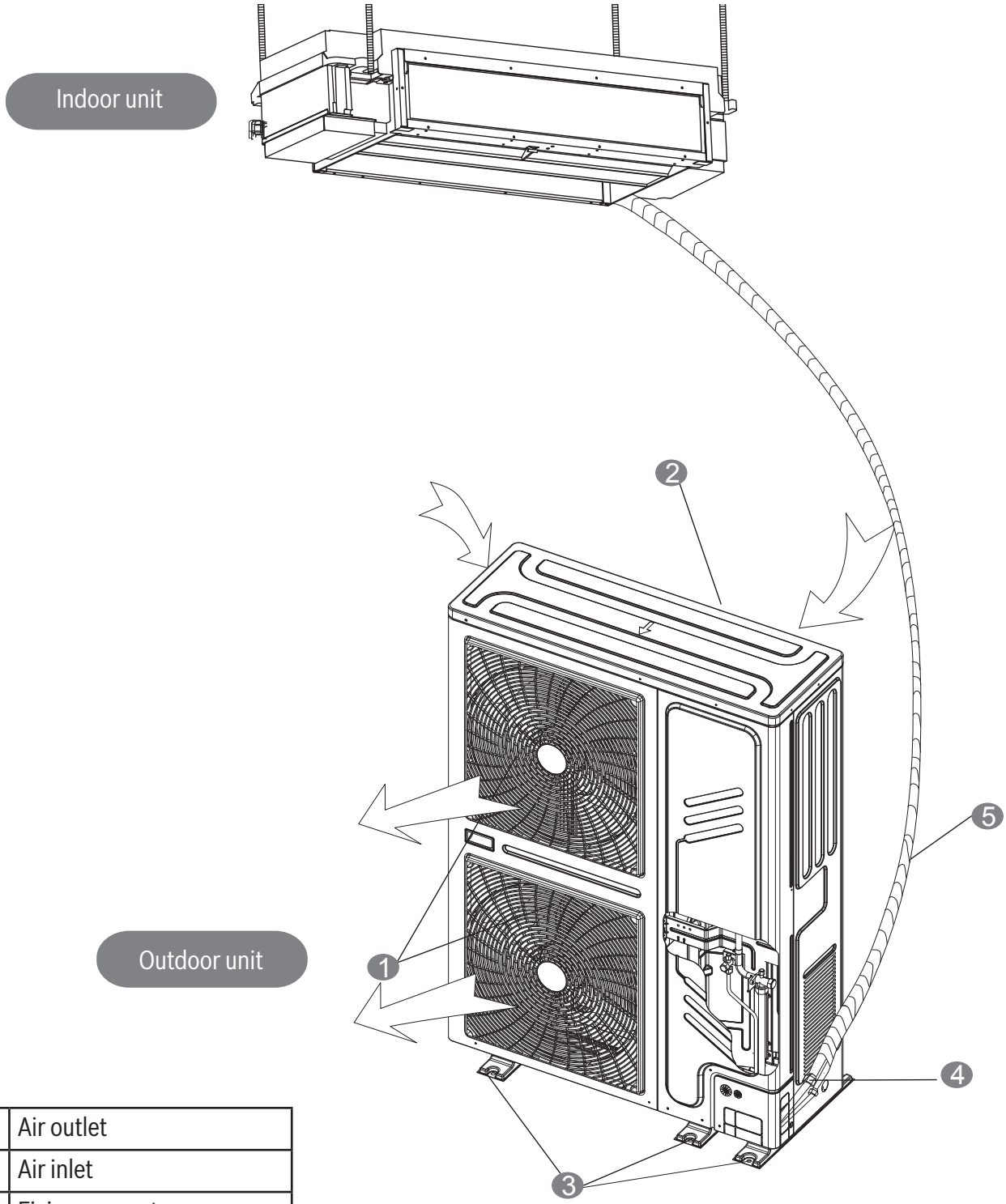


| | |
|---|---|
| ① | Air outlet |
| ② | Air inlet |
| ③ | Fixing support |
| ④ | Refrigerant pipe connector |
| ⑤ | Connection pipe |

**NOTE**

All the pictures in this manual are for explanation purpose only.
They may be slightly different from the air conditioner you purchased (depending on model). The actual shape shall prevail.

CONTENTS PAGE



# 1. IMPORTANT SAFETY INFORMATION

**To prevent injury to the user or other people and property damage, the following instructions must be followed. Incorrect operation due to ignoring of instructions may cause harm or damage.**

The safety precautions listed here are divided into two categories. In either case, important safety information is listed which must be read carefully.

## WARNING

Failure to observe a warning may result in serious injury. The appliance shall be installed in accordance with national wiring regulations.

## CAUTION

Failure to observe a caution may result in injury or damage to the equipment.

## WARNING

**Ask your dealer for installation of the air conditioner.**

Only a qualified refrigeration and electrician engineer may install this unit failure to do so could in a water leakage, electric shock, and fire.

**Repair, and maintenance.**

Incorrect repair, and maintenance may result in a water leakage, electric shock, and fire.

**In order to avoid electric shock, fire or injury, or if you detect any abnormality such as smell of fire, turn off the power supply and call your installer.**

**Never let the indoor unit or the remote controller get wet.**

It may cause an electric shock or a fire.

**Never press the button of the remote controller with a hard, pointed object.**

The remote controller may be damaged.

**Never replace a fuse with that of incorrectly rated current or other wires when a fuse blows out.**

Use of wire or copper wire will cause the unit to break down or cause a fire.

**It is not good for your health to expose your body to the air flow for a long time.**

**Do not insert fingers, rods or other objects into the air inlet or outlet.**

When the fan is rotating at high speed, it will cause injury.

**Never use a flammable sprays such as hair spray, lacqueror paint near the unit.**

It may cause a fire.

**Never touch the air outlet or the horizontal blades while the swing flap is in operation.**

Fingers may become caught or the unit may break down.

**Never put any objects into the air inlet or outlet.**

Objects touching the fan at high speed can be dangerous.

**Never inspect or service the unit by yourself.**

Ask a qualified service person to perform this work.

**Do not dispose this product as unsorted municipal waste. Collection of such waste separately for special treatment is necessary.**

Do not dispose of electrical appliances as unsorted municipal waste, use separate collection facilities.

Contact you local government for information regarding the collection services available.

**If electrical appliances are disposed of in landfills or dumps, hazardous substances can leak into the ground damaging your health and well-being.**

**To prevent refrigerant leak, contact your dealer.**

When the system is installed and runs in a small room, it is required to keep the concentration of the refrigerant, below the limit. Otherwise, oxygen in the room may be affected, resulting in a serious accident.

**The refrigerant in the air conditioner is safe and does not normally leak.**

If the refrigerant leaks in the room, contact with a fire of a burner, a heater or a cooker may result in a harmful gas.

**Turn off any combustible heating devices, ventilate the room, and contact your installer.**

Do not use the air conditioner until a service person confirms that the refrigerant leak is repaired.

**If the supply cable is damaged, it must be replaced by the manufacturer, its service angent or similarly qualified person in order to avoid a hazard.**

## CAUTION

**Do not use the air conditioner for other purposes.**

In order to avoid any quality deterioration, do not use the unit for cooling precision instruments, food, plants, animals or works of art.

**Before cleaning, ensure to stop the operation, turn the breaker off.**

Otherwise, an electric shock and injury may result.

**In order to avoid electric shock or fire, make sure that an earth leak detector is installed.**

**Ensure the air conditioner is grounded.**

In order to avoid electric shock, make sure that the unit is grounded and that the earth wire is not connected to gas or water pipe, lightning conductor or telephone cable.

**In order to avoid injury, do not remove the fan guard of the outdoor unit.**

**Do not operate the air conditioner with a wet hand.**

An electric shock may happen.

**Do not touch the heat exchanger fins.**

These fins are sharp and could result in injuries.

**Do not place items which might be damaged by moisture under the indoor unit.**

Condensation may form if the humidity is above 80%, the drain outlet is blocked or the filter is polluted.

**After a long use, check the unit stand and fitting for damage.**

If damaged, the unit may fall and result in injury.

**To avoid oxygen deficiency, ventilate the room sufficiently if equipment with burner is used together with the air conditioner.**

**Arrange the drain hose to ensure smooth drainage.**

Incomplete drainage may cause wetting of the building, furniture etc.

**Never touch the internal parts of the controller.**

Do not remove the front panel. Some parts inside are dangerous to touch.

**Never expose children, plants or animals directly to the air flow.**

Adverse influence to children, animals and plants may result.

**Do not allow a child to mount the outdoor unit and avoid placing any object on it.**

Falling or tumbling may result in injury.

**Do not use pesticides in close proximity to this unit.**

Failure to observe could cause the chemicals to become deposited in the unit, which could endanger the health of those who are hypersensitive to chemicals.

**Do not install the air conditioner at any place where flammable gas may leak out.**

If the gas leaks out and stays around the air conditioner, a fire may break out.

**Children should not play with this appliance. Cleaning and user maintenance should only be made by a qualified and trained person..**

**When capacity of indoor unit greater than the sum of 100%, capacity of indoor unit will be attenuated.**

**When capacity of indoor unit greater than or equal to the sum of 120%, in order to ensure the effectiveness of machine, then try to operate the indoor units at different times.**

**The temperature of refrigerant circuit will be high, please keep the interconnection cable away from the copper tube.**
**Poor environmental conditions, the appliance should be maintained a month and a half or so; If the environment condition is good, may be extended appropriately maintenance cycle.**

**The A-weighted sound pressure level is below 70dB.**

## 1.1 Electrical safety requirements

1. Electrical work job must be done by a certified electrician.
2. Electrical work must comply to electrical safety specifications.
3. Ensure the air conditioner is grounded which means the main power switch of air-conditioner grounded with reliable grounded wire.
4. Ensure the min. space between PTC electrical heating elements and flammable surface is >12mm.
5. Separate power power supply is required for the air conditioner which meet the rated parameters for the air-conditioner

## 1.2 Electrical performance requirements

Table 1-1

| Model | Fuse(A) | Power supply specification |
|---|---|---|
| MDCI40-3 | 70 | 380-415V 3N~ 50Hz |
| MDCI45-3 | 90 | |

**CAUTION**

Do not interfere or damage the ground wire from the power supply.

The unit must be switched on 12 hours before first using it

# 2. OPERATING CONDITIONS

## 2.1 Operation conditions under each mode

Use the unit in the following temperature for safe and effective operation.

Table 2-1

| | |
|---|---|
| Cooling operation | Indoor temp.: 21 ℃ to 32 ℃ |
| | Outdoor temp.: -5 ℃ to 48 ℃ |
| Heating operation | Indoor temp.: under 28 ℃, above 0 ℃ |
| | Outdoor temp.: -15 ℃ to 24 ℃ |

**CAUTION**

- The safety cut out device may start if running the unit outside the above condition, which will prevent the unit from operation.
- Under “Cool” operation, room relative humidity should be less than 80%. If higher than 80%,the surface of indoor unit may produce condensate which will be blown from air outlet. If less than 80%, please move the air leading bar to the largest air oultet position (which is vertical direction), and set the fan speed to be “High”.

## 2.2 Cooling Limitations

**1. Cooling Limitations**

Outdoor unit main control board has limited cooling key: SW1 (see *Fig.2-1*). One press will send limited cooling signal to all the indoor units. Limit all the indoor units to limit cooling operation. Outdoor units operate as the fixed frequency shown in Table 2-2. Indoor unit fan operate at a high speed and press the key again to log out constraint cooling mode.

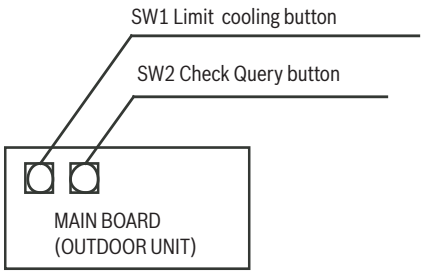


*Fig. 2-1*

Table of force cooling frequency — Table 2-2

| Model | Force cooling rate(Hz) |
|---|---|
| MDCI40-3 | 62 |
| MDCI45-3 | 48 |

**2. Spot check**

Check the outdoor main control panel in the spot check button (refer to *Fig. 2-1*), and press this button. The digital pipe of the main control panel will display the parameters (display one parameter every press of this button) as the following table 2-3 sequence.

Table 2-3

| NO. | | Display content | Remarks |
|---|---|---|---|
| | Normal display | Operation frequency | |
| 1 | 0. - - | Outdoor unit address | 0 |
| 2 | 1. - - | Outdoor unit capacity | 8, 10, 12, 14, 16, 18 |
| 3 | 2. - - | Module outdoor unit quantity | Reserved |
| 4 | 3. - - | Qty. setting of indoor units | Actual value |
| 5 | 4. - - | Total capacity of outdoor unit | Reserved |
| 6 | 5. - - | Total requirement of indoor unit capacity | Actual value |
| 7 | 6. - - | Total requirement of main unit corrected capacity | Actual value |
| 8 | 7. - - | Operation mode | 0, 2, 3, 4 |
| 9 | 8. - - | This outdoor unit actual operati-on capacity | Capacity requirements |
| 10 | 8. - - | Speed of fan A | 0, 1, ....., 9, 10 |
| 11 | 10. - - | Speed of fan B | 0, 1, ....., 9, 10 |
| 12 | 11. - - | T2B/T2 average Temp. | Actual value |
| 13 | 12. - - | T3/T3A pipe temp. | Actual value |
| 14 | 13. - - | T4 ambient temp | Actual value |
| 15 | 14. - - | Discharge Temp. of Invertercom-pressor A | Actual value |
| 16 | 15. - - | Discharge Temp. of Inverter compressor B | Actual value |
| 17 | 16. - - | Reserved | |
| 18 | 17. - - | Current of inverter compressor A | Actual value |
| 19 | 18. - - | Current of inverter compressor A | Actual value |
| 20 | 19. - - | Opening angle of EXV A | |
| 21 | 20. - - | Opening angle of EXV B | |
| 22 | 21. - - | High pressure | Reserved |
| 23 | 22. - - | T3B | |
| 24 | 23. - - | Qty. of Indoor units | Communicate with units |
| 25 | 24. - - | Qty. of the working Indoor units | Actual value |
| 26 | 25. - - | Priority mode | 0, 1, 2, 3, 4 |
| 27 | 26. - - | Night noise control mode | 0, 1, 2, 3 |
| 28 | 27. - - | Static pressure mode | |
| 29 | 28. - - | DC voltage A | Actual value ÷10 |
| 30 | 29. - - | DC voltage B | Actual value ÷10 |
| 31 | 30. - - | Reserved | Reserved |
| 32 | 31. - - | Reserved | Display code 8.8.8 |
| 33 | 32. - - | ———— | Check end |

NOTE: Normal display: When on standby, the high position displays the address of the outdoor unit, and the low position displays the Qty. of indoor units that can communicate with outdoor unit. When it is operating, it will display the rotation frequency of the compressor.

1. Operation mode: 0—OFF; 2—Cooling; 3—Heating; 4—Constraint cooling;
2. Fan speed: 0-stop; 1~10: speed increase sequentially, 10 is the max. fan speed.
3. EXV opening angle: Pulse count=display value*8;
4. Priority mode: 0-heating priority mode ; 1-cooling priority mode ; 2-open the priority mode first; 3-respond the heating mode only; 4-respond the cooling mode only.
5. Night noise control mode: 0-Night noise control mode; 1-silent mode; 2-reserve; 3-no priority.

## 2.3 5-minute protection feature

- A protection feature prevents the air conditioner from being activated for approximately 5 minuites when it restarts immediately after operation.

## 2.4 Cooling, Heating, operation of DC speed regulation central A/C

- The indoor unit can be controlled separately, but indoor units in the same system cannot simultaneously operate the cooling and heating.
- If there is conflict between cooling mode and heating mode, the indoor unit under cooling operation will stop and the operating panel will display “Non-priority” or “Standing-by” code. The indoor unit under heating operation will operate normally.
- If the administrator has fixed set the cooling or heating operation, it cannot do the operations beyond the setting. When do the operations beyond the setting, the operating panel will display “Non-priority” or “Standing-by” code and the unit stops.

## 2.5 Features of heating operation

- Warm air will not be blown out immediately at the beginning of the heating operation,3~5minutes later (depending on the indoor and outdoor temperature), until the indoor heat exchanger becomes hot, then blows out warm air.
- During operation, the fan motor in the outdoor unit may stop running under high temperature.

## 2.6 Defrosting in heating operation

- During heating operation, the outdoor unit will sometimes defrost. To increase efficiency, the unit will start defrosting automatically (about 2~10 minutes), and then water will be drained out from outdoor unit.
- During defrosting, both the fan motors in the outdoor unit and indoor unit will stop running.

## 2.7 Heating capacity

- The heating operation is a heat-pump process that heat will be absorbed from outdoor air and released in doors. Once the outdoor temperature is decreased, heating capacity decreased correspondingly.
- Other heating equipment is suggested to be used together when outdoor temperature is too low.

## 2.8 About protection equipment

- This Protection Equipment will enable the Air Conditioner to stop when the Air Conditioner is to be used continuously. When the Protection Equipment is activated, the Operation Indicator still lights up while the Air Conditioner is not running.

The protection equipment may be activated in following conditions:

- Under cooling operation, the air inlet or air outlet of outdoor unit is blocked. Strong wind is continuously blowing to the air outlet of the outdoor unit.
- Under heating operation, too much dust and rubbish sticks to the dust filter in the indoor unit. The air outlet of indoor unit is blocked.

**CAUTION**

- When the protection equipment starts, please shut down the manual power switch, and restart operation after problem is solved.

## 2.9 Malfunction in operation

- If malfunction happens because of lighting or mobile wireless, please switch off the manual power switch, and turn on again, then push the ON/OFF button.

## 2.10 Power supply

- If there is a power cut , the unit will switch off automatically.
- When the power comes back on, the unit lamp display will flash, the unit will then auto restart.

# 3. INSTALLATION

**CAUTION**

- A/C installation should comply with the regulations in GB17790-2008 and the requirements in Installation manual.
- When moving the A/C to another place, install the unit according to Installation manual by a specialized person.
- Improper installation could lead to electric shock or fire.

## 3.1 Users' instruction

1. Only use the certified power supply corresponding to the A/C nameplate, actual voltage should be within 90% ~ 110% of the rated voltage.
2. RCCB and air switch should be installed in the power supply circuit, the capacity should be 1.5 times of A/C maximum current value.
3. Use specified fuse or RCCB under installation manual.
4. Electrical Installation can only be carried out by a qualified electrician
5. Make sure the A/C has been ground wiring properly. The main switch of A/C must reliably ground wiring.
6. Ensure that your power supply is sufficient for the unit. If not please contact your electricity supplier.

## 3.2 Installation position

**1. Do not install the unit in such places**

1) Do not install it in the place where TV, stereo phonographs and radio distance the unit less than 1m, noise made by A/C could affect those appliences.
2) Do not install high frequency equipment near the unit,(e.g. commercial sewing machine or massager),or the A/C may fail.
3) Do not place items which might be damaged by moisture under the indoor unit.
4) Do not install in a salty atmosphere, such as nearby the sea.
5) Do not install the air conditioner in any place where flammable gas may leak out.
6) Do not install it in the place where there's strong wind, e.g. seashore, roof or high floor of a tall building.

**2. For the detailed requirements, please go over Installation Manual**

For the detailed information, please refer to Installation manual.

**CAUTION**

- Please install the unit securely or abmormal noise and vibration will be heard.
- Install the outdoor unit where operation noise and discharged air cannot affect neighbours.

# 4. MAINTENANCE

## 4.1 Check before operating

1. Check that the unit is still grounded.
2. Switch on the power supply switch 12 hours before operation.

## 4.2 NON-A/C errors

1. For common protections, please refer to indoor unit operation manual.
2. For NON-A/C errors, please refer to indoor unit operation manual.

## 4.3 Error information and code

If the following situation happens, please stop the unit and switch off the power supply and contact with local customer service center.

Table 4-1

| Display | Code | Malfunction or Protection | Remarks |
|---|---|---|---|
| 1 | E0 | Outdoor unit COMM.Error | |
| 2 | E1 | Phase protection | |
| 3 | E2 | COMM.Error with indoor unit | In or after 20min, communication breaks 2 times for the first time to electrified |
| 4 | E3 | Reserved | |
| 5 | E4 | T4 ambient temp. and T3 pipe temp. sensor error | |
| 6 | E5 | Voltage protecation | |
| 7 | E6 | DC fan Protection | |
| 8 | E7 | Discharge sensor error | If discharge temp. is below 15 ℃ for 5 min after 10 minutes operating, displays E7, when GAS is higher than 25 ℃, it recovers |
| 9 | E8 | Outdoor unit address error | |
| 10 | xE9 | Wrong drive model | X represents in which system, 1 is system A, 2 is system B |
| 11 | EL | E-lock error | Main chip can't communicate with the E-lock chip for 1 min for the first time to electrify |
| 12 | EA | 5-min protection in A zone (heating fan) | |
| 13 | Eb | 2 continuous E6 error in 10 min | POR |
| 14 | xH0 | COMM. Error between IR341 and main chip | X represents in which system, 1 is system A, 2 is system B |
| 15 | H1 | COMM. Error between 0537 and main chip | |
| 16 | H2 | Reserved | |
| 17 | H3 | Reserved | |
| 18 | xH4 | 3 times of P6 protection in 60 munites | X represents in which system, 1 is system A, 2 is system B,<br>Not recoverable unitil re-power on |
| 19 | H5 | 3 times of P2 protection in 60 munites | Not recoverable until re-power on |
| 20 | H6 | 3 times of P4 protection in 100 munites | Not recoverable until re-power on |
| 21 | H7 | Qty. of indoor units decreases error | Indoor unit lost for over 3 munites; not recoverable, until the unit qty. recover |
| 22 | H9 | 3 times of P9 protection in 60 minutes | Not recoverable until re-power on |
| 23 | Hb | Reserved | |
| 24 | HC | Reserved | |
| 25 | xHD | Reserved | |
| 26 | PL | The Temp. protection of inverter module | |
| 27 | C7- | 3 times of PL protection in 90 minutes | Not recoverable until re-power on |
| 28 | P1 | High pressure protection or discharge temp. protection | |
| 29 | P2 | Low pressure protection | |
| 30 | xP3 | Compressor current protection | X represents in which system, 1 is system A, 2 is system B |
| 31 | P4 | Discharge Temp.Protection | |

| Display | Code | Malfunction or Protection | Remarks |
|---|---|---|---|
| 32 | P5 | High condenser Temp.Protection | |
| 33 | PE | Evaporator T2 high temp. protection | |
| 34 | PF | E-lock unlocking | |
| 35 | xP6 | Inverter module protection | X represents in which system, 1 is system A, 2 is system B |
| 36 | P7 | Reserved | |
| 37 | P8 | Reserved | |
| 38 | P9 | DC fan protection | |
| 39 | xL0 | DC compressor module error | X represents in which system, 1 is system A, 2 is system B |
| 40 | xL1 | DC bus low pressure protection | X represents in which system, 1 is system A, 2 is system B |
| 41 | xL2 | DC bus high pressure protection | X represents in which system, 1 is system A, 2 is system B |
| 42 | xL3 | Reserve | X represents in which system, 1 is system A, 2 is system B |
| 43 | xL4 | MCE error/synchronization/closed loop | X represents in which system, 1 is system A, 2 is system B |
| 44 | xL5 | Zero speed protection | X represents in which system, 1 is system A, 2 is system B |
| 45 | xL6 | Reserve | X represents in which system, 1 is system A, 2 is system B |
| 46 | xL7 | Phase error protection | X represents in which system, 1 is system A, 2 is system B |
| 47 | xL8 | Protection of the speed change between a moment before and after is >15Hz | X represents in which system, 1 is system A, 2 is system B |
| 48 | xL9 | Protection of the speed change between the setting speed and the actual speed >15Hz | X represents in which system, 1 is system A, 2 is system B |

If the problem still existing, please contact the sales distributor or the service center, tell us your model No. and the detail of the error.

**CAUTION**

Only qualified and trained personnel can adjust or change this unit.

## 4.4 Cleaning

**WARNING**

- Stop the unit and switch off the power before cleaning for safety.
- Pay attention to T1 thermal bulb when cleaning. DO NOT drop T1 thermal bulb cable, or dismantle it before cleaning and reinstall after cleaning.

1. **Outdoor units**
   1) Some metal edges and condenser blades are very sharp, improper operation could lead injury. Therefore, be extremely careful when cleaning these parts.
   2) Inspect outdoor unit air outlet and inlet regularly, for any blockage or dirt build up.
   3) Window-shade at right bottom side and back side are heat dissipation air inlet of electric control components, clean it regularly to avoid super hot in the components.
2. **For detailed information about cleaning, please refer to Indoor unit operation manual.**

## 4.5 Maintenance

**CAUTION**

After leaving unused for a long time, inspect the air inlet and air outlet port of indoor and outdoor unit. See if it has been blocked, if it is blocked, clean before usage of unit.

**Before a long-time idling, please do the following work:**

1. Choose “air supply mode” and leave the indoor unit operating for a while for drying.
2. Switch off the power supply and stop the RCCB. Take battery out of the remote control.
3. Outdoor unit internal components should be inspected and cleaned regularly, please contact the service center or technical services department.

## 4.6 After-sale service

When the air-conditioner does not operate normally, please stop the unit and switch off the power supply. Please contact the service center or technical services department. For the detailed items, please refer to Users’ guide in accessory.

# 5. APPLICABLE MODEL AND MAINCB PARAMETERS

Note:

1. Cooling capacity is tested in the indoor DB/WB temp. of 27 ℃/19 ℃, outdoor DB/WB temp. of 35 ℃/24 ℃; heating capacity is tested in the indoor DB/WB temp. of 20 ℃/15 ℃ outdoor DB/WB temp. of 35 ℃/24 ℃. Actual heating/cooling capacity will be different according to the indoor and outdoor ambient temp. and relative humidity.
2. Noise is tested in a semi-anechoic chamber noise test room according to the international standard, parameter in the table is the nominal value in regulated rated work conditions, it will be different according to different working conditions.
3. Due to product improvement, values above could be changed. Subject to the parameters in the nameplate.
4. Outside static pressure is 0Pa when air-conditioner is being tested. Under heating operation

# 6. F-GAS INFORMATION

| Model | Product Description | N.Cooling Capacity | N.Heating Capacity | Refrigerant | GWP | CO2 equivalent for precharged refrigerant | Pre-charged Refrigerant Amount | Additionally Charged Refrigerant | Overall amount of refrigerant after charging | Overall CO2 equivalent after charging |
|---|---|---|---|---|---|---|---|---|---|---|
| | | [kW] | [kW] | - | - | [tonnes] | [kg] | [kg] | [kg] | [kg] |
| MDCI 40-3 | Outdoor Unit, 2-pipe, 3ph | 40 | 45 | R-410A | 2088 | 18,792 | 9 | | | |
| MDCI 45-3 | Outdoor Unit, 2-pipe, 3ph | 45 | 50 | R-410A | 2088 | 25,056 | 12 | | | |

Frequency of Refrigerant Leak Checks

- If the amount of tons CO2 equivelant/circuit is from 5 to 50 tons, then frequency to check is 12 months in case system is without a leakage dedection system or 24 months in case system is with a leakage dedection system.
- If the amount of tons CO2 equivelant/circuit is from 50 to 500 tons, then frequency to check is 6 months in case system is without a leakage dedection system or 12 months in case system is with a leakage dedection system.
- If the amount of tons CO2 equivelant/circuit is over 500 tons, then frequency to check is 3 months in case system is without a leakage dedection system or 6 months in case system is with a leakage dedection system.

**[bg] Важни указания във връзка с инсталацията/монтажа**

Инсталацията/монтажът трябва да се извършва от лицензиран за работите специалист в съответствие с приложимите разпоредби.

- Съблюдавайте съответните ръководства на компоненти на уредбата, принадлежности и резервни части.
- Преди всички работи: На всички полюси уредбата не трябва да бъде под напрежение.

**[de] Wichtige Hinweise zur Installation/Montage**

Die Installation/Montage muss durch eine für die Arbeiten zugelassene Fachkraft unter Beachtung der geltenden Vorschriften erfolgen.

- Mitgeltende Anleitungen von Anlagenkomponenten, Zubehören und Ersatzteilen beachten.
- Vor allen Arbeiten: Anlage allpolig spannungsfrei machen.

**[el] Σημαντικές υποδείξεις για την εγκατάσταση/συναρμολόγηση**

Η εγκατάσταση/συναρμολόγηση πρέπει να πραγματοποιείται από εξουσιοδοτημένο για τις εργασίες αυτές τεχνικό προσωπικό, το οποίο θα πρέπει να φροντίζει ώστε να τηρούνται οι ισχύουσες διατάξεις.

- Λάβετε υπόψη τις συνοδευτικές οδηγίες που αφορούν τα εξαρτήματα της εγκατάστασης, τους πρόσθετους εξοπλισμούς και τα ανταλλακτικά.
- Πριν από οποιαδήποτε εργασία: Αποσυνδέστε όλους τους πόλους της εγκατάστασης από το ρεύμα.

**[en] Important notes on installation/assembly**

The installation/assembly must be carried out by a professional who is authorised to do the work, and with due regard to the relevant regulations.

- Observe all the relevant instructions for other system components, accessories and spare parts.
- Before starting any work: disconnect the system from the power supply across all phases.

**[es] Indicaciones importantes para instalación/montaje**

La instalación/el montaje lo debe realizar personal especializado autorizado para los trabajos, respetando las prescripciones vigentes.

- Respetar las instrucciones de referencia de los componentes de la instalación, los accesorios y las piezas de repuesto.
- Antes de todos los trabajos: eliminar la tensión en todos los polos de la instalación.

**[fr] Instructions importantes pour l'installation/le montage**

L'installation/le montage doit être effectué(e) par un spécialiste qualifié pour les opérations concernées et dans le respect des prescriptions applicables.

- Respecter également les notices des composants de l'installation, des accessoires et des pièces de rechange.
- Avant tous les travaux : couper la tension sur tous les pôles de l'installation.

**[it] Avvertenze importanti per l'installazione/il montaggio**

L'installazione/il montaggio deve aver luogo ad opera di una ditta specializzata ed autorizzata in osservanza delle disposizioni vigenti.

- Osservare le istruzioni allegate dei componenti dell'impianto, degli accessori e delle parti di ricambio.
- Prima di tutti i lavori: staccare completamente l'alimentazione elettrica dell'impianto.

**[kk] Орнатуға/монтаждауға қатысты маңызды ескертулер**

Орнату/монтаждау жұмыстарын рұқсаттары бар және тиісті ережелерге сәйкес маман орындауы қажет.

- Басқа қондырғы компоненттерін, қосымша құрылғыларға және қосалқы бөлшектерге арналған барлық қатысты нұсқауларды орындаңыз.
- Кез келген жұмысты бастаудың алдында: қондырғыны қуат көзінен барлық фаза бойынша ажыратыңыз.

**[nl] Belangrijke aanwijzingen betreffende de installatie/montage**

De installatie/montage moet worden uitgevoerd door een voor de werkzaamheden geautoriseerde installateur rekening houdend met de geldende voorschriften.

- Houd u aan de geldende handleidingen van installatiecomponenten, accessoires en reserveonderdelen.
- Voor alle werkzaamheden: schakel de installatie over alle polen spanningsloos.

**[pl] Ważne wskazówki dotyczące instalacji/montażu**

Zainstalowanie/montaż muszą być wykonane przez uprawnionego do tego rodzaju prac specjalistę przy zachowaniu obowiązujących przepisów.

- Przestrzegać dodatkowych instrukcji dołączonych do komponentów instalacji, osprzętu i oraz części zamiennych.
- Przed przystąpieniem do wykonywania wszelkich prac: odłączyć instalację od zasilania sieciowego (wszystkie bieguny).

**[pt] Indicações importantes relativas à instalação/montagem**

A instalação/montagem deve ser efectuada por um técnico especializado com qualificações para estes trabalhos, tendo em atenção os regulamentos em vigor.

- Ter em consideração as instruções aplicáveis de componentes da instalação, acessórios e peças de substituição.
- Antes de todos os trabalhos: desligar a instalação da corrente em todos os pólos.

**[ro] Indicații importante privind instalarea/montajul**

Instalarea/montajul trebuie realizate de către un specialist autorizat pentru lucrările respective, respectându-se prescripțiile valabile.

- Respectați instrucțiunile conexe referitoare la componentele instalației, accesorii și piese de schimb.
- Anterior tuturor lucrărilor: decuplați instalația de la alimentarea cu tensiune la toți polii.

**[tr] Kurulum/Montaj ile ilgili önemli uyarılar**

Kurulum/Montaj çalışmaları sadece yetkili bayiler tarafından aşağıda belirtilen talimatlar dikkate alınarak yapılmalıdır.

- Tesisat parçalarına, aksesuarlara ve yedek parçalara ait talimatları dikkate alın.
- Çalışmaya başlamadan önce: Enerji beslemesinin tüm kutuplarını ayırarak tesisatın enerji beslemesini kesin.

BOSCH
Bosch Thermotechnik GmbH
Junkersstrasse 20-24
D-73249 Wernau/Germany

Bosch Thermotechnology Ltd.
Cotswold Way, Warndon, Worcester WR4 9SW
All Enquiries: 0330 123 3004
www.bosch-industrial.co.uk